# VivarA

## Dry-running in-line pumps | regulated

Moving people and elements

Biral®

# A matter of the heart – Biral impresses customers with its comprehensiveness and expertise.

For over 100 years, we have dedicated ourselves to one task – to make the best pumps and systems out there. They may only serve the purpose of moving fluids from A to B. But they do so reliably, sustainable and flawlessly, making users' lives easier. If there is ever an emergency, you can depend on our reliable support and service, further consolidating your trust in Biral.


## Biral's values – at our core.

### Customer-focused

We see ourselves as Partners.

Purchasing our products creates an alliance. We offer our customers comprehensive assistance, from the moment they contact us through to purchase, support and the renewal of existing systems.

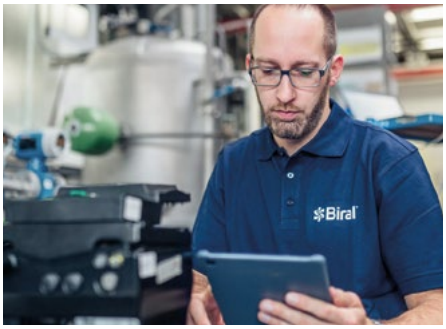

### Intelligent

We are smart.

Our solutions impress customers thanks to their ingenuity, simplicity and the fact that they are tailored to meet their needs.

### Human

We are personable.

Providing personal consultations is very important to us and lays the foundation for understanding our customers all across the world. This approach forms the basis of all our new solutions and developments.

# Table of contents

# General details

## 1 Introduction

With the new VivarA, Biral offers you another pump which excels in saving energy and economic efficiency, replacing the renowned VariA-E model. The VivarA brings together the best of two worlds. This model follows the successful ModulA concept and anticipates the simple operating concept with Bluetooth Connect to the dry-running in-line pump. This means that it can be easily connected to the Biral ONE app and integrated into any building services control system using separately supplied BIM modules. With the new Bluetooth interface to the Biral ONE app, we were able to simplify the operating and information possibilities compared to the previous pump.

**IE5, our standard**
Sustainability is our goal and IE5 is our standard. The latest generation of synchronous motors takes the entire series to the next level – efficiency class IE5. The VivarA therefore surpasses all ErP guidelines for efficiency class IE4.

We don't set an upper limit on what we can achieve and guarantee optimal energy efficiency up to the most powerful VivarA pump, which generates 18.5 kW of power. In addition, all pump sizes meet the requirements of the Minimum Efficiency Index (MEI). This means that all model sizes convey the corresponding volumes of materials.

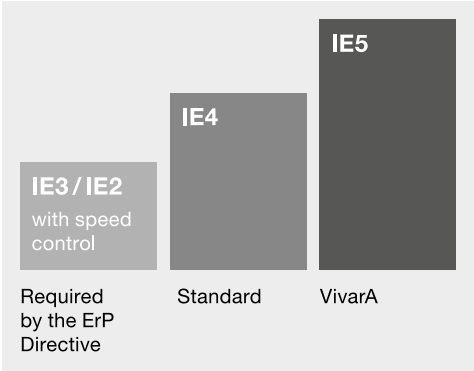


**Fig. 1:** Overview of efficiency classes

**Amortisation**
Using a controlled VivarA really pays off. Thanks to VivarA's lower power consumption, the operating costs can be substantially reduced when compared to conventional pumps. Customers will amortise a new VivarA pump in less than two years.

### 1.1 Product description

The VivarA series comprises single-stage in-line centrifugal pumps with floating ring seal. The hydraulics of the pump are divided into two separate and isolated units opposite the motor, but connected to each other via a shaft. This is known as a dry-running pump.

The VivarA series can be used in a wide variety of applications thanks to the large media temperature range of **–20 °C to +140 °C**, so the pumps can be used in the following areas:
- Heating
- District heating systems
- Cooling
- Industrial cooling
- Industrial applications
- Water supply

The VivarA is equipped from the factory with a differential pressure sensor and a frequency inverter. In comparison to a non-regulated pump, this allows continuous adaptation of the discharge head and flow rate.

Each pump is factory preconfigured and tested, so that the pumps can be installed particularly easily and safely. After installation and connection to the power supply, the pump is immediately ready for operation. Thanks to the simple operating concept from Biral, paired with the Biral ONE app, set-up becomes hassle-free and completely intuitive.

### 1.2 Applications

The VivarA has integrated speed control, which automatically adapts the performance to different operating conditions. This keeps electricity consumption as low as possible at all times. The pump covers a speed range between 25% and 100% and can be operated within this field.

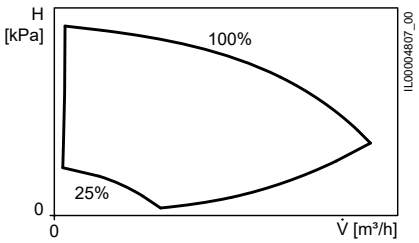


**Fig. 2:** Operating field of the VivarA

A 100% characteristic curve corresponds to the characteristic curve of a non-regulated pump. Depending on the application, the pumps can increase convenience, save energy or optimise processes. So the VivarA can be used in applications in which, for instance, the differential pressure ought to be regulated.

# 2 Design

The VivarA series consists of the VivarA S and the VivarA M. The two types are essentially distinguished only by the housing shape. While the VivarA S builds on a ModulA housing, the VivarA M has an enhanced VariA housing. Both housings are equipped with a split ring and are CDP-coated, in order to guarantee consistently high efficiency over the entire service life.


**Fig. 3:** VivarA S housing


**Fig. 4:** VivarA M housing

The entire series consists of single-level dry-running pumps in an in-line design with opposing intake and discharge ports of the same nominal diameter. The pumps are equipped with air-cooled synchronous motors and a frequency inverter (IE5), which ensure that the discharge head is continuously adapted to the flow rate. The motor drives the impeller over an extended shaft. The pumps are designed according to the pull-out principle, i.e. the pump head (motor, housing lid and impeller) can be removed for servicing or maintenance, while the pump housing stays in the piping. With this principle, the constructed frequency inverter, etc. can easily be set up to suit individual requirements (see Section 4 "Installation"). The pump is preset and checked at the plant, allowing it to be installed quickly and safely.

## 2.1 Materials

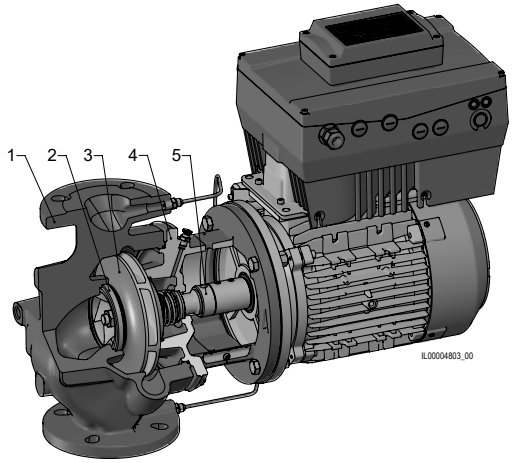


**Fig. 5:** Sectional drawing of VivarA

| Item | Component | Pump type | Material |
|---|---|---|---|
| 1 | Pump housing | VivarA S+M | Cast iron EN-GJL-250 |
| 2 | Split ring | VivarA S | Stainless steel 1.4404 |
| | | VivarA M | Brass CuZn34Mn3AL2Fe1 |
| 3 | Impeller | VivarA S | Composite PES GF30 |
| | | VivarA M | Cast iron EN-GJL-200 |
| 4 | Housing lid | VivarA S+M | Cast iron EN-GJL-250 |
| 5 | Stub shaft | VivarA S+M | Stainless steel 1.4301 |

## 2.2 Characteristics and advantages of the design

### 2.2.1 In-line design

Unlike standard pumps or block pumps, in-line pumps allow direct cable routing. This generally saves more space and the installation costs can be significantly reduced.

### 2.2.2 Pump housing with cathodic dip painting (CDP)

The CDP process is characterised by its excellent corrosion resistance, providing a solvent-resistant anti-corrosion coating even in the smallest cavities.

With this method, the housing is dipped in an aqueous, electrically conductive paint. Then an electric field is created and the paint separates out. The applied paint is then fired at approx. 200 °C. Very even, sealed organic paint layers emerge. The dip primer used is environmentally friendly, free of heavy metals and black – similar to RAL 9005.

#### 2.2.3 Pull-out design

Thanks to the pull-out design, the motor or the frequency inverter can be rotated into the position best aligned with the surroundings – without having to remove the whole pump. In addition, this design makes it easy to remove the pump head for service work; the housing does not have to be extended from the line in this instance.

#### 2.2.4 Optimised hydraulics

Optimised hydraulics allow a lower power input, which has a positive effect on the operating costs. The housing geometry is therefore optimally adjusted to the impeller. The impeller itself is made of cast iron or composite for wear-free operation with high efficiency.

#### 2.2.5 High-efficiency motors

The complete VivarA series is equipped with high-efficiency motors as standard. These are characterised by low electricity consumption and comply with the ErP guidelines. All motors used, combined with the frequency inverter, are in line with the highest efficiency class IE5.

## 2.3 Piping connections

The VivarA S has a PN 6–16 combination flange from DN 40 to 65 and a PN 10/16 connection from DN 80, as well as a PN 6 version of each.
Whereas the VivarA M has only a PN 10/16 flange. All pump flanges can be connected to pipe flanges in accordance with EN 1092-2 and ISO 7005-2.

## 2.4 Floating ring seal

A Q7/Q7 floating ring seal is installed as standard. This consists of a rubber bellows seal with the silicon carbide/silicon carbide sealing surface pairing and secondary seals made of EPDM. These floating ring seals can be used for a wide temperature range. Coolant or antifreeze can also be transported with this floating ring seal. More details on the permitted pumped media can be found in Section 8 "Pumped media".

# 3 Operation

The pump operating settings can be applied in two ways, via the pump control panel and the Biral ONE app.

## 3.1 Control panel

The Biral control panel is also at the centre of the VivarA. The interface that is simple and intuitive to operate is already familiar from other models.

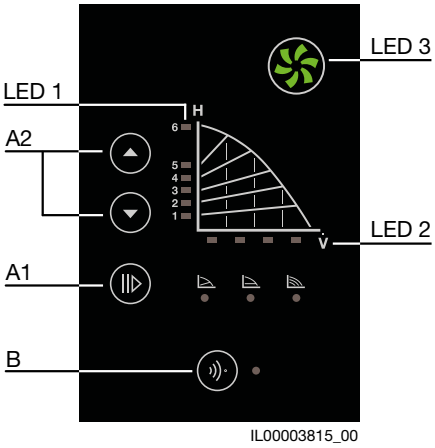


**Fig. 6:** Biral control panel

| Item | Symbol | Description |
|---|---|---|
| LED 1 | | Display of the set control characteristic curve (stage), ten stages can be set. |
| LED 2 | | Display of the current pumped quantity V (25–100%). The volumetric flow rate displayed represents a derivative of the pressure. |
| LED 3 | | Biral Impeller with status display. You can find further information in Section 3.5 "Status display/Biral Impeller" |
| A1 | | Operating button for setting the control mode and for switching the pump on and off.<br>**Switching on:** If the button is pressed for three seconds when the pump is switched off, the pump will start, provided that no functions with a higher priority are activated.<br>**Switching off:** If the button is pressed for three seconds when the pump is running, the pump will switch off. |
| A2 | | The two operating buttons "Up arrow" and "Down arrow" are used to adjust the discharge head.<br>**Keylock:** By simultaneously pressing the buttons (three seconds), all function buttons are activated or deactivated. |
| B | | The button activates the Bluetooth connection with the Biral ONE app on your mobile device. |

## 3.2 Control modes (A1)

The control mode can be set using the (A1) button. Do this by pressing the button to switch between proportional pressure – constant pressure – constant speed, in that order.

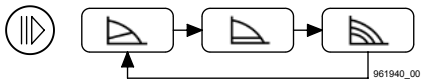


**Fig. 7:** Control mode cycle

### 3.2.1 Area of application

**Proportional pressure (pp) control mode**

**Application**

This control mode is suitable for systems with relatively large pressure losses in the distribution lines and for air conditioning systems and cooling systems.

- Double-pipe heating systems with thermostatic valves and
  - very long distribution lines
  - heavily throttled balancing valves
  - differential pressure regulators
  - large pressure losses in the parts of the system through which all the water flows (e.g. boiler, heat exchanger and distribution lines up to the first branch)
- Primary circuit pumps in systems with large pressure losses in the primary circuit
- Air conditioning systems with
  - heat exchangers (fan convectors)
  - cooling ceilings
  - cooling surfaces

**Constant pressure (cp) control mode**

**Application**

This control mode is suitable for systems with relatively low pressure losses in the distribution lines.

- Double-pipe heating systems with thermostatic valves and
  - designed for gravity circulation
  - low pressure losses in the parts of the system through which all the water flows (e.g. boiler, heat exchanger and distribution lines up to the first branch) or when switching to a high temperature difference between flowing forwards and flowing back (such as with district heating)
- Underfloor heating with thermostatic valves
- Single-pipe heating systems with thermostatic valves or balancing valves
- Primary circuit pumps in systems with low pressure losses in the primary circuit

General details

**Constant speed (cs) control mode**

**Application**

If the pump is connected to an external control system, you can switch from one constant characteristic curve to another constant characteristic curve, depending on the value provided by the external signal. The pump can also be set so that it runs on the MAX. or MIN. characteristic curve:

- The "MAX. characteristic curve" operating mode should be selected in times with high volumetric flow rate requirement. This operating mode is suitable for a hot-water priority circuit, for instance.
- The "MIN. characteristic curve" operating mode should be selected in times with low volumetric flow rate requirement.

## 3.3 Discharge head (A2)

The set value of the pump can be set by pressing the ⬇ or ⬆ button. The light fields on the control panel display the set target value. LED 6 indicates the MAX. characteristic curve and can be selected in the proportional pressure and constant speed control modes. The other five LEDs indicate the characteristic curves between MAX. and MIN. characteristic curve.

### 3.3.1 Example

| | |
|---|---|
| **LED 3 lights up (green)** | Characteristic curve 3 is set 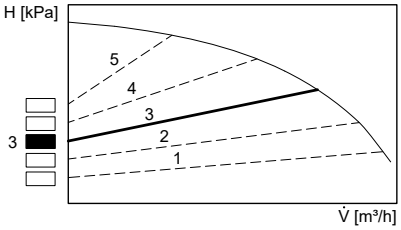  |
| **LEDs 3 and 4 light up (green)** | Characteristic curve between 3 and 4 is set. 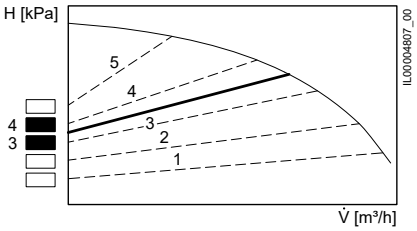  |

## 3.4 Resetting the fault message

A fault message can be acknowledged in one of the following ways:

- By briefly pressing the ⬇ or ⬆ button on the control panel of the pump. This does not change the setting of the pump. If the keylock is active, acknowledgement via these buttons is not possible.
- By switching off the power supply until all indicator lights have gone off.
- By deactivating and reactivating the external ON/OFF input.
- Using the Biral ONE app.

## 3.5 Status display/Biral Impeller

The status display or Biral Impeller shows the status of the pump.

| Biral Impeller | Display | Description |
|---|---|---|
| **Normal operating mode** | | |
| – | No display lights up | The power supply is switched off.<br>The pump is not running. |
|  | The impeller lights up **green and rotates** clockwise. | The power supply is switched on.<br>The pump is running in normal operating mode.<br>Signal source: Internal |
|  | One element of the impeller lights up **and stays green**. | The power supply is switched on.<br>The pump is not running, it is at a stop.<br>Signal source: Internal |
|  | The impeller lights up **green and rotates** clockwise, followed by a flashing impeller. | The power supply is switched on.<br>The pump is running in normal operating mode.<br>Signal source: External |
|  | One element of the impeller lights up **and stays green**, followed by a flashing impeller. | The power supply is switched on.<br>The pump is not running, it is at a stop.<br>Signal source: External |
| **Warning** | | |
|  | The impeller lights up **red and rotates** clockwise. | There is a warning.<br>The pump is running.<br>Signal source: Internal |
|  | One element of the impeller lights up **and stays red**. | There is a warning.<br>The pump is not running, it is at a stop.<br>Signal source: Internal |
|  | The impeller lights up **red and rotates** clockwise, followed by a flashing impeller. | There is a warning.<br>The pump is running.<br>Signal source: External |
|  | One element of the impeller lights up **and stays red**, followed by a flashing impeller. | There is a warning.<br>The pump is not running, it is at a stop.<br>Signal source: External |
| **Alarm** | | |
|  | The impeller flashes **red**. | There is an alarm.<br>The pump is not running. |

## 3.6 Biral ONE

The pump is prepared for wireless communication with the Biral ONE app. Connection between the pump and app is via Bluetooth.

The Biral ONE app offers a guided commissioning process and a cockpit for live monitoring. Reading and sending operating records is also possible. All product information can also be called up.

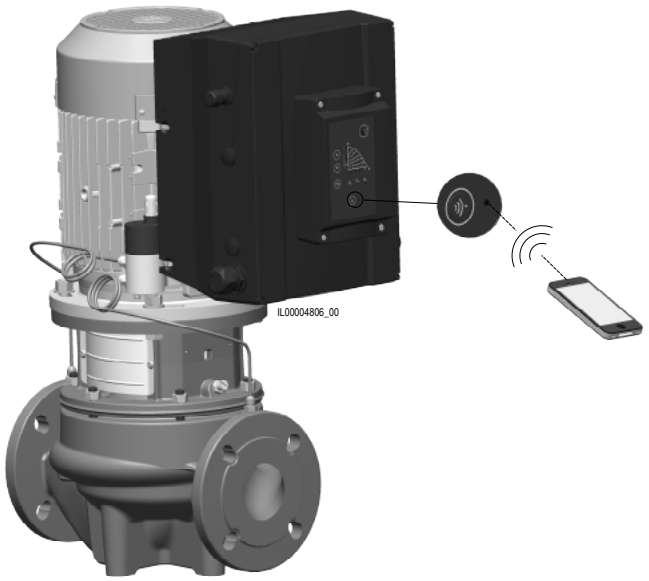


**Fig. 8:** Communication between pump and Biral ONE app

In order to use this function, press button (B) on the pump and start the Biral ONE app on your mobile device, tapping on the cockpit, configuration or log button, depending on application. The connection is then automatically established.

## 3.7 Communication

In addition to remote control via Biral ONE or the control panel of the pump, communication with the pump can also be via a building management system (BMS).

The VivarA can be incorporated into diverse building management systems such as Profibus, Modbus or BACnet via a BIM module. A control module can also be incorporated, which enables the following applications:
- Self-regulating pumps
- External speed specification*
- External target value specification
- Operating or ready message (can be switched)
- Alternating mode or reserve mode

You can find further information on the BIM modules in Section 9 "Biral Interface Modules".

* Can be retrofitted

# 4 Installation

## 4.1 Assembly

The VivarA can be assembled in horizontal or vertical piping, as long as the piping can take the weight. If the piping is not in the position to carry the pump weight, the pump must be mounted on a console or base plate. The bleeding screw (LV) must always face upwards; the housing lid may have to be rotated.

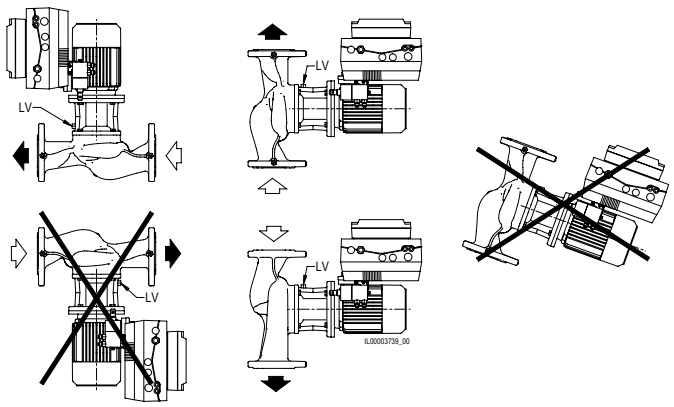


**Fig. 9:** Permitted assembly positions

**Note:** The motor must never face downwards! The pumps must be installed free of tension, so that no forces arising from the pipes are transmitted to the pump housing.

The frequency inverter or the pump head can be rotated by 90 degrees. It makes no difference whether the pump is installed horizontally or vertically.

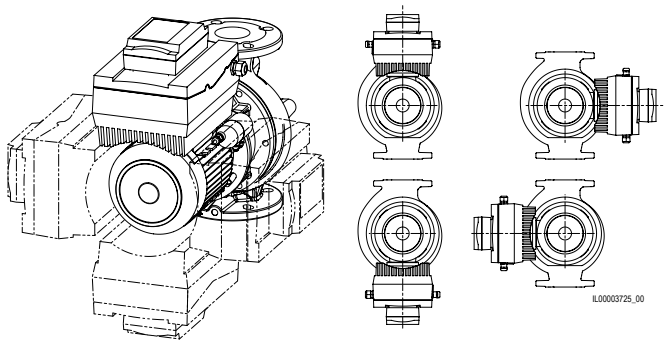


**Fig. 10:** Frequency inverter position: Pump vertical

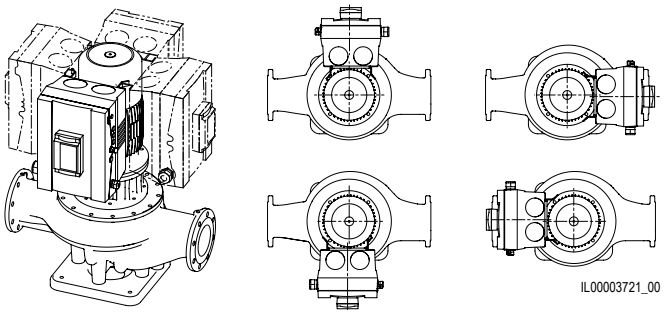


**Fig. 11:** Frequency inverter position: Pump horizontal

## 4.2 Piping

For installations where the pump is built directly into the piping, the piping must be supported on both sides of the pump. The distance may be no more than three times the DN nominal pipe size. For installations where the pump is built directly into the piping, the pump must be lifted into the right position with ropes or the like and held there until both pump flanges are firmly attached to the pipe flanges.

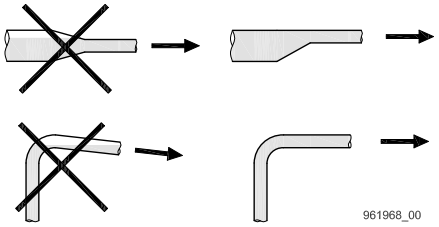


**Fig. 12:** Correct piping

Suction and pressure lines must be adequately dimensioned according to the maximum pump intake pressure. The pipes must be laid in such a way that air pockets are avoided. This applies especially to the intake side of the pump. If possible, we recommend installing an isolation valve on both sides of the pump. This means that the entire system does not have to be drained when working on the pump.

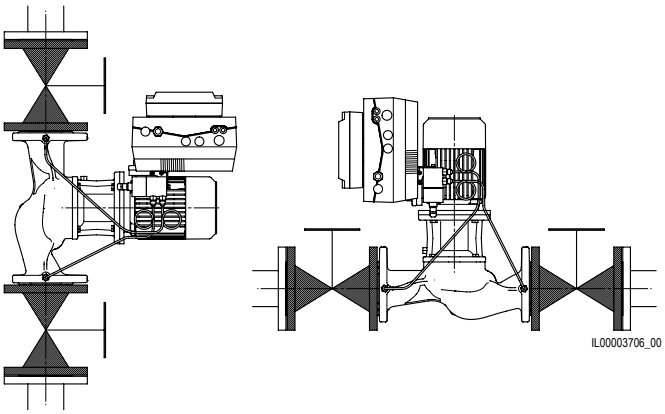


**Fig. 13:** Isolation valve for better handling

## 4.3 Installation restrictions

The installation may only be carried out after all welding and soldering work on the system has been completed. Dripping water on the pump motor, especially on the electronics, must absolutely be avoided.

A clearance of 300 mm (VivarA S) and 1000 mm (VivarA M) is required above the motor. This provides access for disassembling the pump head and thus for maintaining and inspecting the pump.

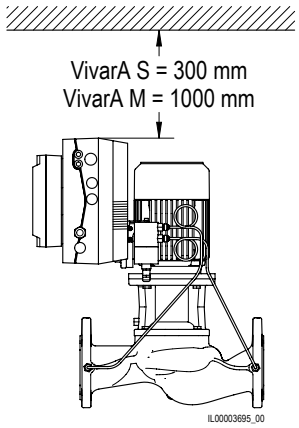


**Fig. 14:** Clearance for servicing

The following points must also be observed to ensure adequate motor and electronics cooling:
- The minimum distance of 50 mm between the fan cover and another fixed object must be maintained.
- The temperature of the cooling air must not exceed 40 °C.
- The cooling fins and the fan blade must be kept clean.
- To prevent condensation on the electronics, motors which are installed outdoors must be shielded by suitable protection (not available as Biral accessory).

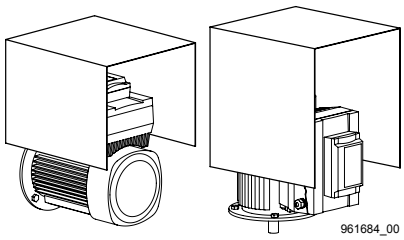


**Fig. 15:** Protective device

## 4.4 Noise and vibration damping

To guarantee as low a level of noise and vibration as possible, we recommend fitting vibration damping on the pump. Generally, we recommend this measure from an output of 11 kW. But smaller motors can still cause unwanted noises and vibrations.

These arise from the rotation of motor and pump components and from the flowing pumped medium. The effect on the environment is subjective, but depends on correct assembly and the quality of the rest of the system components.

Noises and vibrations can best be prevented by installing the pumps on a concrete base. In addition, the use of vibration dampers and pipe compensators is recommended.

A concrete base should be used from a pump weight of 150 kg. As a guideline, the weight of the concrete base should correspond to 1.5 times the pump weight.

# 5 Electrical specifications

## 5.1 Motor data

The motors used consist of completely covered, fan-cooled motors with principal dimensions according to the applicable IEC and DIN standards. The electrical tolerances comply with IEC 34. All pumps across the entire series are equipped with synchronous motors of efficiency class IE5.

| | |
|---|---|
| **Relative humidity** | Maximum 95% |
| **Protection class** | IP 55 |
| **Thermal class** | F according to IEC 85 |
| **Ambient temperature** | –20 °C to +40 °C |

| Item no. | Pump | I [A] | P1 [kW] |
|---|---|---|---|
| 7000000590 | VivarA S 40-8 250 | 0.98 | 0.44 |
| 7000000598 | VivarA S 40-12 250 | 1.42 | 0.71 |
| 7000000599 | VivarA S 40-15 250 | 1.65 | 0.9 |
| 7000000600 | VivarA S 40-18 250 | 2.16 | 1.27 |
| 7000000601 | VivarA S 40-20 250 | 2.34 | 1.37 |
| 7000000602 | VivarA S 40-24 250 | 2.99 | 1.84 |
| 7000000603 | VivarA S 50-6 270 | 0.98 | 0.43 |
| 7000000604 | VivarA S 50-8 270 | 1.19 | 0.61 |
| 7000000605 | VivarA S 50-12 270 | 1.5 | 0.82 |
| 7000000606 | VivarA S 50-15 270 | 1.84 | 1.05 |
| 7000000607 | VivarA S 50-18 270 | 2.73 | 1.68 |
| 7000000608 | VivarA S 50-20 270 | 3.57 | 2.15 |
| 7000000609 | VivarA S 50-24 270 | 4.44 | 2.74 |
| 7000000610 | VivarA S 65-6 340 | 1.04 | 0.47 |
| 7000000611 | VivarA S 65-8 340 | 1.34 | 0.67 |
| 7000000612 | VivarA S 65-12 340 | 1.74 | 0.96 |
| 7000000613 | VivarA S 65-15 340 | 2.61 | 1.6 |
| 7000000614 | VivarA S 65-18 340 | 3.51 | 2.09 |
| 7000000615 | VivarA S 65-20 340 | 3.94 | 2.38 |
| 7000000618 | VivarA S 80-12 360 PN6 | 2.58 | 1.57 |
| 7000000619 | VivarA S 80-12 360 | 2.58 | 1.57 |
| 7000000620 | VivarA S 80-15 360 PN6 | 3.58 | 2.15 |
| 7000000621 | VivarA S 80-15 360 | 3.58 | 2.15 |
| 7000000622 | VivarA S 80-18 360 PN6 | 4.26 | 2.68 |
| 7000000623 | VivarA S 80-18 360 | 4.26 | 2.68 |
| 7000000626 | VivarA S 100-12 450 PN6 | 2.51 | 1.53 |
| 7000000627 | VivarA S 100-12 450 | 2.51 | 1.53 |
| 7000000628 | VivarA S 100-15 450 PN6 | 3.55 | 2.12 |
| 7000000629 | VivarA S 100-15 450 | 3.55 | 2.12 |
| 7000000630 | VivarA S 100-18 450 PN6 | 4.33 | 2.68 |
| 7000000631 | VivarA S 100-18 450 | 4.33 | 2.68 |
| 7000000632 | VivarA M 40-30 340 | 5.16 | 3.24 |
| 7000000633 | VivarA M 40-36 340 | 6.9 | 4.41 |
| 7000000634 | VivarA M 40-43 340 | 9.92 | 6.16 |
| 7000000635 | VivarA M 40-53 440 | 12.43 | 7.83 |
| 7000000636 | VivarA M 40-63 440 | 18.73 | 11.5 |
| 7000000637 | VivarA M 50-29 340 | 5.3 | 3.35 |
| 7000000638 | VivarA M 50-36 340 | 7.02 | 4.49 |
| 7000000639 | VivarA M 50-43 340 | 9.9 | 6.17 |

| Item no. | Pump | I [A] | P1 [kW] |
|---|---|---|---|
| 7000000640 | VivarA M 65-21 340 | 5.16 | 3.24 |
| 7000000641 | VivarA M 65-25 340 | 6.9 | 4.44 |
| 7000000642 | VivarA M 65-34 340 | 10.04 | 6.25 |
| 7000000643 | VivarA M 65-41 340 | 12.38 | 7.77 |
| 7000000644 | VivarA M 80-18 360 | 5.28 | 3.33 |
| 7000000645 | VivarA M 80-21 360 | 6.94 | 4.4 |
| 7000000646 | VivarA M 80-24 360 | 9.82 | 6.19 |
| 7000000647 | VivarA M 80-25 440 | 12.38 | 7.7 |
| 7000000648 | VivarA M 80-33 440 | 19.15 | 11.93 |
| 7000000649 | VivarA M 80-40 440 | 24.9 | 15.66 |
| 7000000650 | VivarA M 100-16 450 | 6.78 | 4.35 |
| 7000000651 | VivarA M 100-20 450 | 9.66 | 5.94 |
| 7000000652 | VivarA M 100-24 450 | 12.36 | 7.7 |
| 7000000653 | VivarA M 100-25 550 | 17.79 | 10.89 |
| 7000000654 | VivarA M 100-31 550 | 24.55 | 15.25 |
| 7000000655 | VivarA M 100-36 550 | 29.5 | 18.81 |
| 7000000659 | VivarA M 125-11 620 | 7.42 | 4.75 |
| 7000000660 | VivarA M 125-13 620 | 10.12 | 6.3 |
| 7000000661 | VivarA M 125-16 620 | 13.2 | 8.29 |
| 7000000662 | VivarA M 125-19 620 | 21.45 | 13.35 |
| 7000000663 | VivarA M 125-23 800 | 23.3 | 14.35 |
| 7000000664 | VivarA M 125-30 800 | 30.85 | 19.58 |
| 7000000665 | VivarA M 150-13 800 | 13.23 | 8.32 |
| 7000000666 | VivarA M 150-16 800 | 20.6 | 12.74 |
| 7000000667 | VivarA M 150-20 800 | 25.5 | 15.99 |
| 7000000668 | VivarA M 150-22 800 | 32.25 | 20.41 |

## 5.2 Supply voltage

3 × 400 V, +/-10% 50/60 Hz

## 5.3 Leakage currents

With VivarA, leakage currents (touch currents) of up to 3.5 mA can occur. The pump is protected against higher leakage currents by a protective earth conductor ex works.

## 5.4 Connecting the power supply

The pump must be fused by the customer and connected to an external mains switch. All cables used must be heat-resistant up to 85 °C. They must not touch the piping, pump or motor housing. All cables must be connected in accordance with EN 60204-1 and EN 50174-2:2000.

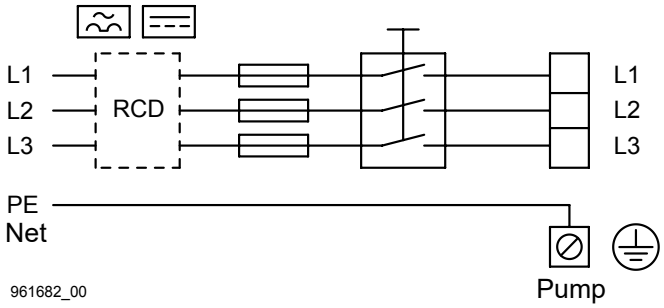


**Fig. 16:** An example of connecting a motor to the mains supply with a mains switch, preliminary fuse and additional protective device.

Ensure that the electrical data specified on the nameplate corresponds to the power supply available.

## 5.5 Mains switch

The pump must be fused by the customer and connected to an external all-pole mains switch. The switch must have a contact opening of at least 3 mm per pole according to IEC 364.

## 5.6 Additional protection

If, due to the mains current or electricity supplier requirements, the residual current circuit breaker protective measure should be applied, residual current circuit breakers must be used which

- also trip in the event of pulsating direct fault currents and smooth direct fault currents (all-current sensitive version) in line with DIN VDE 0664.
- take into account the charging current pulse to earth when switching on the mains.
- are suitable for the leakage current of the pump.

If pulsed residual currents occur as a result of transient (short-term) mains overvoltages and uneven phase loading when starting up, an all-current sensitive residual current circuit breaker as per DIN VDE 0160 and EN 50178 must be used.
The circuit breakers must be marked with the two symbols shown. A conventional type A residual current circuit breaker, also called RCD (residual current-operated protective device) is not permitted.

**Motor protection**
No external motor protection is required for the pump. The motor has integrated overtemperature protection, which offers sufficient protection against gradual overloading and against blocking. The motor is consequently also protected against overheating.

**Overvoltage protection**
The pump is protected against overvoltages by means of varistors installed between the phases and between the phases and earth.

## 5.7 Switching cycles

When connected directly to the mains, the pump must not be switched on and off more than four times per hour on the mains side. If the pump is switched on directly via the power supply, it starts up with a delay of approx. five seconds. If the pump must be switched on and off more than four times per hour, use the input for external ON/OFF. If the pump is switched on or off by an external ON/OFF switch, it starts immediately.

## 5.8 Wiring diagram

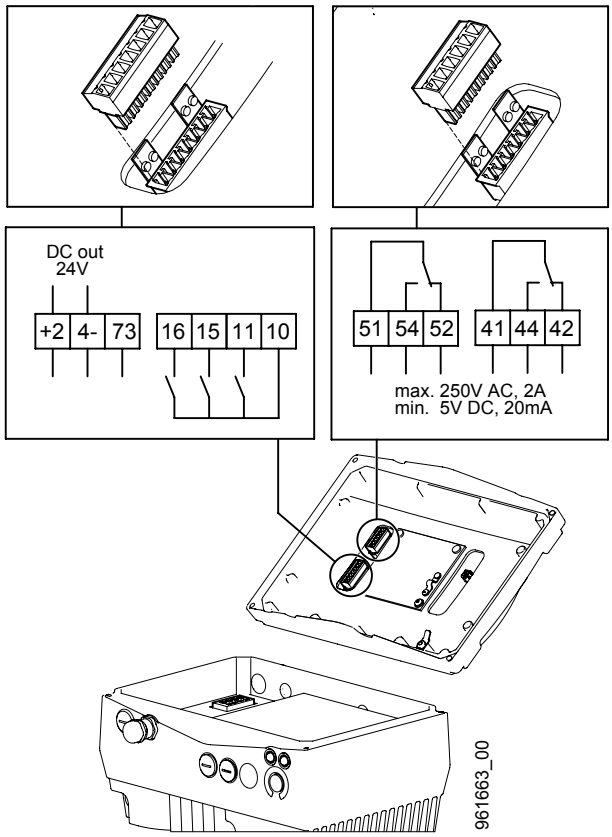


**Fig. 17:** Electrical connections of the VivarA

| Terminal labelling | |
|---|---|
| +24- | 24 V DC out |
| 73 | Actual value input 4–20 mA |
| 10, 11 | External ON or external OFF |
| 10, 15 | Minimum speed digital input |
| 10, 16 | Maximum speed digital input |
| 52, 54, 51 | Collective fault or operating message |
| 42, 44, 41 | Operating or ready message |

## 5.9 Switch settings

The VivarA has three switches for switching between operating message and fault message, between ready message and operating message and between external ON/OFF.

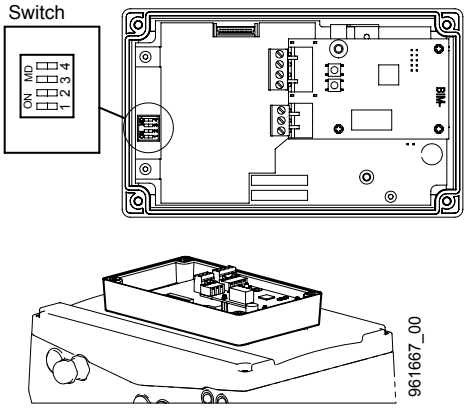


**Fig. 18:** Position of the switch in the FI cover

The following functions can be set with the switch (ON/OFF):

| | Switch 1 | Switch 2 | Switch 3 |
|---|---|---|---|
| **ON** | Operating message<br>Terminals 52, 54, 51 | Ready message<br>Terminals 42, 44, 41 | External ON |
| **OFF** | Fault message<br>Terminals 52, 54, 51 | Operating message<br>Terminals 42, 44, 41 | External OFF |

All switches are set to OFF ex works.

General details

| | | Connection | Status | Connection | Status |
|---|---|---|---|---|---|
| | | 51 54 52 | | 51 54 52 | |
| Fault message (SSM) | Switch 1 OFF<br>ON 1 | 51 54 52 | **Biral Impeller :**<br>Rotating (green/red)<br>**Fault message inactive** | 51 54 52 | **Biral Impeller :**<br>Rotating (green/red)<br>**Fault message inactive** |
| | | 51 54 52 | **Biral Impeller :**<br>Alarm<br>**Fault message active** | 51 54 52 | **Biral Impeller :**<br>Alarm<br>**Fault message active** |
| Operating message (BM) | Switch 1 ON<br>ON 1 | 51 54 52 | **Biral Impeller :**<br>Rotating (green/red)<br>**Operating message active** | 51 54 52 | **Biral Impeller :**<br>Rotating (green/red)<br>**Operating message active** |
| | | 51 54 52 | **Biral Impeller :**<br>Stationary (green/red)<br>**Operating message inactive** | 51 54 52 | **Biral Impeller :**<br>Stationary (green/red)<br>**Operating message inactive** |

**Switch 1: Fault message or operating message (can be switched)**
The pump has a signal relay with an electrically isolated changeover switch for an external fault message. The signal relay can be switched over to an operational message by means of Switch 1. The switch factory is set to OFF, the operating message (BM) is thus activated.

| | | Connection | Status | Connection | Status |
|---|---|---|---|---|---|
| | | 41 44 42 | | 41 44 42 | |
| Operating message (BM) | Switch 2 OFF<br>ON 2 | 41 44 42 | **Biral Impeller :**<br>Stationary (green/red)<br>**Operating message inactive** | 41 44 42 | **Biral Impeller :**<br>Stationary (green/red)<br>**Operating message inactive** |
| | | 41 44 42 | **Biral Impeller :**<br>Rotating (green/red)<br>**Operating message active** | 41 44 42 | **Biral Impeller :**<br>Rotating (green/red)<br>**Operating message active** |
| Ready message (BrM) | Switch 2 ON<br>ON 2 | 41 44 42 | **Biral Impeller:**<br>Alarm<br>**Ready message inactive** | 41 44 42 | **Biral Impeller :**<br>Alarm<br>**Ready message inactive** |
| | | 41 44 42 | **Biral Impeller :**<br>Rotating (green/red)<br>**Ready message active** | 41 44 42 | **Biral Impeller :**<br>Rotating (green/red)<br>**Ready message active** |

**Switch 2: Operating or ready message**
The pump has a signal relay with an electrically isolated changeover switch for an external operating message. The signal relay can be switched to a ready message by means of Switch 2. The switch factory is set to OFF, the ready message (BrM) is thus activated.

| | | Connection | Status | Connection | Status |
|---|---|---|---|---|---|
| External OFF | Switch 3 OFF<br>ON 3 | 11 10 | Operation ON | 11 10 | Operation OFF |
| External ON | Switch 3 ON<br>ON 3 | 11 10 | Operation OFF | 11 10 | Operation ON |

**Switch 3: External OFF or external ON**
The digital input can be used for an external ON/OFF switch for the pump. Switch 3 can be used to switch between external OFF and external ON.

## 5.10 Multi-pump operation

The double pump function on the Biral Interface Module BIM B3 control module (accessories) enables the control of two individual pumps connected in parallel without the need for an external control system. It is designed for alternating mode or reserve mode operation in systems with greater safety requirements. The pumps are switched over whenever required or if the pump fails.

### 5.10.1 Alternating mode (24/24 h) or reserve mode (22/2 h)

Biral Interface Module BIM B3 (for controlled pumps)

**Operating mode: Reserve mode**

| | | | |
|---|---|---|---|
| ON 2 | Switch 2<br>ON | Master (main pump)<br>Slave (reserve pump) | 22 h<br>2 h |

Note: The pump that has completed fewer hours of operation starts first after Power ON.

**Operating mode: Alternating mode**

| | | | |
|---|---|---|---|
| ON 2 | Switch 2<br>OFF | Master (main pump)<br>Slave (reserve pump) | 24 h<br>24 h |

Note: The pump that has completed fewer hours of operation starts first after Power ON.

**Electrical connection BIM B3**

Double pump mode for self-regulating pumps

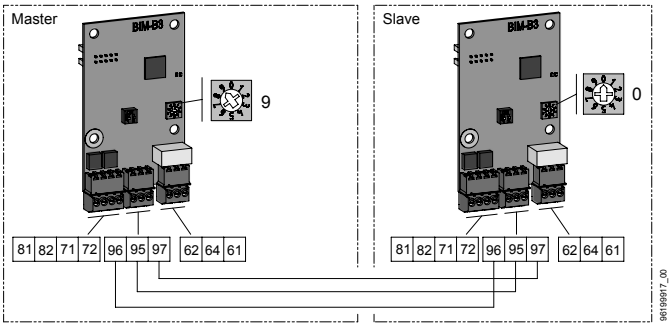


Double pump mode via digital input 81, 82

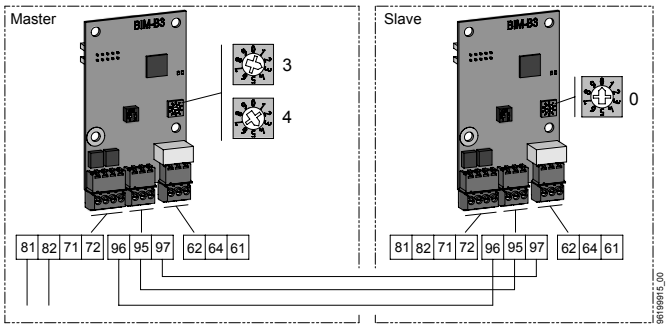


Double pump mode via analogue input 71, 72

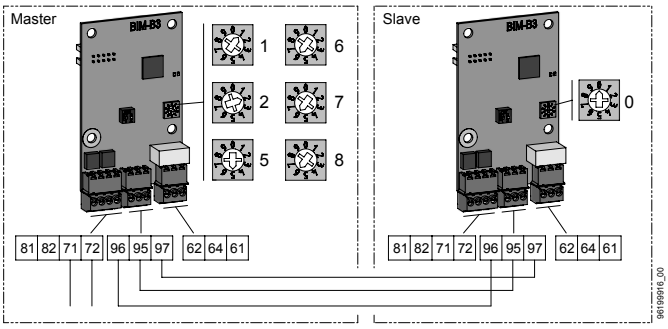

# 6 EMC (electromagnetic compatibility)

Electromagnetic compatibility describes the capacity of electrical or electronic devices to function in a specified electromagnetic environment, without interfering with the surroundings or being interfered with by other devices in the surroundings. Electromagnetic compatibility is essentially divided into emitted interference and interference immunity.

## 6.1 VivarA and electromagnetic compatibility

The CE sign is applied to all pumps. This confirms that the product fulfils the EMC requirements of the European Union.

## 6.2 Installation area of the VivarA

The motors have been checked for electromagnetic compatibility; they fulfil the requirements for industrial areas (C2). This includes equipment that is not directly connected to a low-voltage power grid designed to supply residential buildings.

Applied standard: EN 61800-3

## 6.3 EMC-compliant installation

In practice, larger cable loops are frequently provided in the terminal box as a reserve for connection changes. This procedure can indeed be very helpful, but should not be recommended with regard to electromagnetic compatibility, because the loops function as antennas in the terminal box. To avoid EMC problems, the power cable and its individual conductors must be laid so as to be as short as possible in the terminal box of the pump. If required, reserve lengths should be provided outside the terminal box. To ensure that the installation is EMC-compliant, we recommend using shielded cables for the power supply on all VivarA S models.

# 7 Operating conditions

## 7.1 Ambient temperature

Ambient temperature during operation: **–20 °C to +40 °C**

At 50 °C, the motor can be operated with the rated output power (P2). However, continuous operation at higher temperatures leads to a reduced service life. If the motor is to be operated at ambient temperatures between 40 and 60 °C, a motor with greater power must be selected.

Transport temperature: –10 °C to +50 °C
Storage temperature: +10 °C to +40 °C

## 7.2 Operating pressure

The maximum permissible operating pressure is indicated on the nameplate (6 bar, 10 bar or 16 bar).

| Pressure level | Operating pressure | | Test pressure | |
|---|---|---|---|---|
| | [bar] | [MPa] | [bar] | [MPa] |
| **PN 6** | 6 | 0.6 | 10 | 1.0 |
| **PN 10** | 10 | 1.0 | 16 | 1.6 |
| **PN 16** | 16 | 2.5 | 24 | 2.4 |

## 7.3 Intake pressure

To ensure optimum and smooth pump operation, the intake pressure (system pressure) must be set correctly.

At 500 m above sea level, the minimum intake pressure is:

| VivarA | Media temperature | | |
|---|---|---|---|
| | 75 °C | 95 °C | 110 °C |
| | Intake pressure [bar] | | |
| VivarA S 40 | 0.1 | 0.5 | 1.0 |
| VivarA S 50 | 0.7 | 1.2 | 1.7 |
| VivarA S 65 | 0.7 | 1.2 | 1.7 |
| VivarA S 80 | 0.7 | 1.2 | 1.7 |
| VivarA S 100 | 0.7 | 1.2 | 1.7 |
| VivarA M 40 | 0.1 | 0.5 | 1.0 |
| VivarA M 50 | 0.7 | 1.2 | 1.7 |
| VivarA M 65 | 0.7 | 1.2 | 1.7 |
| VivarA M 80 | 0.7 | 1.2 | 1.7 |
| VivarA M 100 | 0.7 | 1.2 | 1.7 |
| VivarA M 125 | 0.7 | 1.2 | 1.7 |
| VivarA M 150 | 0.7 | 1.2 | 1.7 |

The maximum intake pressure added to the zero pump pressure must always be lower than the "maximum permitted operating pressure".

## 7.4 Flow rate

A minimum flow rate of 10% of the flow rate at the point of maximum efficiency must always flow through the pump. For regulated pumps running at reduced speed, this value may also be lower. The flow rate and the discharge head at the point of maximum efficiency (BEP) can be taken from the pump's data sheet.

The maximum flow rate must not exceed the values given for the individual pumps. Otherwise, there is a risk of cavitation and overloading. For dimensions and weights, please refer to the data sheets in the catalogue.

## 7.5 Installation altitude

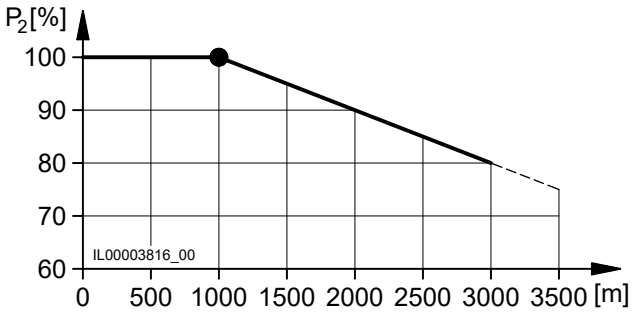


**Fig. 19:** Motor power decreases as installation altitude increases

The installation altitude [m] is the height above sea level at the installation site. Motors installed up to 1000 m above sea level can be operated at 100% of their power. Over 1000 m above sea level, the power must be limited or a larger motor must be installed. The motors can be installed up to 3500 m above sea level.

## 7.6 Humidity

Maximum permissible humidity: 85%

## 7.7 Noise level

The noise pressure level of the VivarA is max. 70 db(A). With some pumps, the noise pressure level can reach a limit value of max. 75 db(A) at full load.

## 7.8 MEI

The Minimum Efficiency Index (MEI) is a dimensionless variable for measuring a pump's hydraulic efficiency at the point of maximum efficiency, when under partial load and when subject to overload. The EU regulation has specified an MEI ≥ 0.10 since 1st January 2013 and an MEI ≥ 0.40 since 1st January 2015 as the minimum efficiency requirement. In addition, a reference value was established in the regulation. This is the efficiency of the most efficient pumps that are currently available on the market.

| Item no. | Pump | Power P2 | MEI |
|---|---|---|---|
| 7000000590 | VivarA S 40-8 250 | 0.25 kW | ≥ 0.7 |
| 7000000598 | VivarA S 40-12 250 | 0.37 kW | ≥ 0.7 |
| 7000000599 | VivarA S 40-15 250 | 0.55 kW | ≥ 0.7 |
| 7000000600 | VivarA S 40-18 250 | 0.75 kW | ≥ 0.7 |
| 7000000601 | VivarA S 40-20 250 | 1.1 kW | ≥ 0.7 |
| 7000000602 | VivarA S 40-24 250 | 1.5 kW | ≥ 0.7 |
| 7000000603 | VivarA S 50-6 270 | 0.37 kW | ≥ 0.7 |
| 7000000604 | VivarA S 50-8 270 | 0.37 kW | ≥ 0.7 |
| 7000000605 | VivarA S 50-12 270 | 0.55 kW | ≥ 0.7 |
| 7000000606 | VivarA S 50-15 270 | 0.75 kW | ≥ 0.7 |
| 7000000607 | VivarA S 50-18 270 | 1.1 kW | ≥ 0.7 |
| 7000000608 | VivarA S 50-20 270 | 1.5 kW | ≥ 0.7 |
| 7000000609 | VivarA S 50-24 270 | 2.2 kW | ≥ 0.7 |
| 7000000610 | VivarA S 65-6 340 | 0.37 kW | ≥ 0.7 |
| 7000000611 | VivarA S 65-8 340 | 0.55 kW | ≥ 0.7 |
| 7000000612 | VivarA S 65-12 340 | 0.75 kW | ≥ 0.7 |
| 7000000613 | VivarA S 65-15 340 | 1.1 kW | ≥ 0.7 |
| 7000000614 | VivarA S 65-18 340 | 1.5 kW | ≥ 0.7 |
| 7000000615 | VivarA S 65-20 340 | 2.2 kW | ≥ 0.7 |
| 7000000618 | VivarA S 80-12 360 PN6 | 1.1 kW | ≥ 0.7 |
| 7000000619 | VivarA S 80-12 360 | 1.1 kW | ≥ 0.7 |
| 7000000620 | VivarA S 80-15 360 PN6 | 1.5 kW | ≥ 0.7 |
| 7000000621 | VivarA S 80-15 360 | 1.5 kW | ≥ 0.7 |
| 7000000622 | VivarA S 80-18 360 PN6 | 2.2 kW | ≥ 0.7 |
| 7000000623 | VivarA S 80-18 360 | 2.2 kW | ≥ 0.7 |
| 7000000626 | VivarA S 100-12 450 PN6 | 1.1 kW | ≥ 0.7 |
| 7000000627 | VivarA S 100-12 450 | 1.1 kW | ≥ 0.7 |
| 7000000628 | VivarA S 100-15 450 PN6 | 1.5 kW | ≥ 0.7 |
| 7000000629 | VivarA S 100-15 450 | 1.5 kW | ≥ 0.7 |
| 7000000630 | VivarA S 100-18 450 PN6 | 2.2 kW | ≥ 0.7 |
| 7000000631 | VivarA S 100-18 450 | 2.2 kW | ≥ 0.7 |
| 7000000632 | VivarA M 40-30 340 | 3 kW | ≥ 0.52 |
| 7000000633 | VivarA M 40-36 340 | 4 kW | ≥ 0.52 |
| 7000000634 | VivarA M 40-43 340 | 5.5 kW | ≥ 0.70 |
| 7000000635 | VivarA M 40-53 440 | 7.5 kW | ≥ 0.7 |
| 7000000636 | VivarA M 40-63 440 | 11 kW | ≥ 0.7 |
| 7000000637 | VivarA M 50-29 340 | 3 kW | ≥ 0.7 |
| 7000000638 | VivarA M 50-36 340 | 4 kW | ≥ 0.7 |
| 7000000639 | VivarA M 50-43 340 | 5.5kW | ≥ 0.7 |

| Item no. | Pump | Power P2 | MEI |
|---|---|---|---|
| 7000000640 | VivarA M 65-21 340 | 3 kW | ≥ 0.7 |
| 7000000641 | VivarA M 65-25 340 | 4 kW | ≥ 0.7 |
| 7000000642 | VivarA M 65-34 340 | 5.5 kW | ≥ 0.7 |
| 7000000643 | VivarA M 65-41 340 | 7.5 kW | ≥ 0.7 |
| 7000000644 | VivarA M 80-18 360 | 3 kW | ≥ 0.69 |
| 7000000645 | VivarA M 80-21 360 | 4 kW | ≥ 0.69 |
| 7000000646 | VivarA M 80-24 360 | 5.5 kW | ≥ 0.69 |
| 7000000647 | VivarA M 80-25 440 | 7.5 kW | ≥ 0.68 |
| 7000000648 | VivarA M 80-33 440 | 11 kW | ≥ 0.68 |
| 7000000649 | VivarA M 80-40 440 | 15 kW | ≥ 0.68 |
| 7000000650 | VivarA M 100-16 450 | 4 kW | ≥ 0.58 |
| 7000000651 | VivarA M 100-20 450 | 5.5 kW | ≥ 0.58 |
| 7000000652 | VivarA M 100-24 450 | 7.5 kW | ≥ 0.58 |
| 7000000653 | VivarA M 100-25 550 | 11 kW | ≥ 0.7 |
| 7000000654 | VivarA M 100-31 550 | 15 kW | ≥ 0.7 |
| 7000000655 | VivarA M 100-36 550 | 18.5 kW | ≥ 0.7 |
| 7000000659 | VivarA M 125-11 620 | 4 kW | ≥ 0.59 |
| 7000000660 | VivarA M 125-13 620 | 5.5 kW | ≥ 0.59 |
| 7000000661 | VivarA M 125-16 620 | 7.5 kW | ≥ 0.59 |
| 7000000662 | VivarA M 125-19 620 | 11 kW | ≥ 0.59 |
| 7000000663 | VivarA M 125-23 800 | 15 kW | ≥ 0.7 |
| 7000000664 | VivarA M 125-30 800 | 18.5 kW | ≥ 0.7 |
| 7000000665 | VivarA M 150-13 800 | 7.5 kW | ≥ 0.5 |
| 7000000666 | VivarA M 150-16 800 | 11 kW | ≥ 0.5 |
| 7000000667 | VivarA M 150-20 800 | 15 kW | ≥ 0.5 |
| 7000000668 | VivarA M 150-22 800 | 18.5 kW | ≥ 0.5 |

# 8 Pumped media

The pump is suitable for pumping pure, low-viscosity, non-explosive and non-aggressive media without solid or long-fibre components which do not corrode the pump mechanically or chemically.

Pumping media with a higher density and/or kinematic viscosity than water reduces the pump's flow rate. This has the following effects on the pump:
– A considerable drop in pressure
– A drop in hydraulic power
– An increased power input

In this case, the pump must be equipped with a larger motor.

**Heating water:**
Requirements according to common standards that apply to the water quality of heating systems, e.g. VDI 2035

## 8.1 List of media

The specifications of the following list serve as a recommendation and do not replace an examination of whether a pumped medium seems conducive to a particular pump material. Warranty obligations can therefore not be derived from the specifications.

Please consider critical factors such as the concentration of the pumped medium, the media temperature or the feed pressure when making your selection. These factors can significantly influence the chemical resistance of certain pump designs.

## 8.2 Media temperature

Floating ring seals that are operated close to their permitted maximum temperature must be regularly serviced and replaced if necessary, as they are subject to increased wear under such conditions.

Media temperature: **–20 °C to +140 °C**

The maximum permissible media temperature depends on the type of shaft seal and pump. Depending on the pump application and cast iron design, the maximum permissible media temperature may be limited by locally applicable regulations and legal requirements.

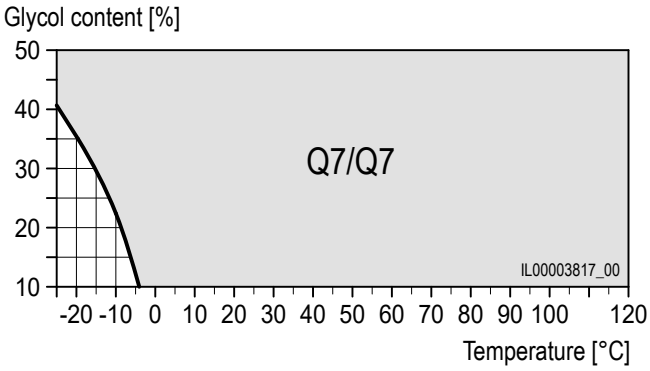


**Fig. 20:** Operating range of the floating ring seal

| Pumped media | Notes | Additional information | Floating ring seal | O-ring |
|---|---|---|---|---|
| **Water** | | | | |
| Ground water | | < 140 °C | Q7/Q7 | EPDM |
| Boiler feed water | | < 140 °C | Q7/Q7 | EPDM |
| District heating water | | < 140 °C | Q7/Q7 | EPDM |
| Condensate | | < 140 °C | Q7/Q7 | EPDM |
| Softened water | C | < 140 °C | Q7/Q7 | EPDM |
| **Coolant/antifreeze** | | | | |
| Ethylene glycol | B, D | < 120 °C | Q7/Q7 | EPDM |
| Glycerine (glycerol) | B, D | < 120 °C | Q7/Q7 | EPDM |
| Potassium acetate | B, C, D | < 120 °C | Q7/Q7 | EPDM |
| Potassium formate | B, C, D | < 120 °C | Q7/Q7 | EPDM |
| Propylene glycol | B, D | < 120 °C | Q7/Q7 | EPDM |
| Brine made of sodium chloride | B, C, D | < 5 °C, 30% | Q7/Q7 | EPDM |

| Notes | |
|---|---|
| **B** | The medium has a density and/or viscosity different from water. This must be taken into account when calculating the motor power and flow rate. |
| **C** | The medium must be oxygen-free (anaerobic). |
| **D** | The medium can crystallise or harden the floating ring seal. |

## 8.3 Type designation

**VivarA M 80 – 12 360 PN6**

- Type series
- Pump housing S/M
- Nominal diameter DN [mm]
- Max. pressure (at zero head)
- Overall length [mm]
- Pressure level (if below PN 16)

## 8.4 Operating curves

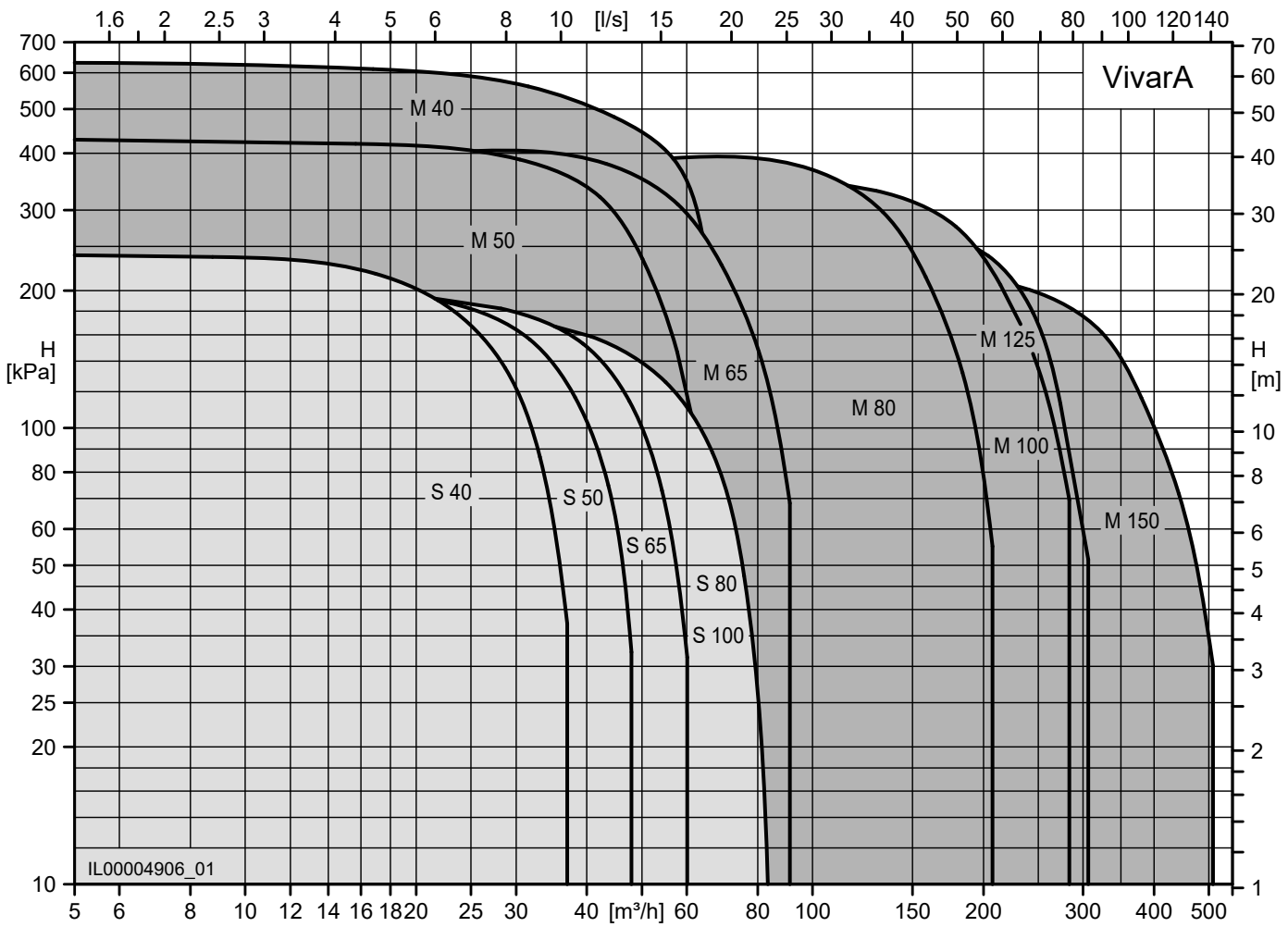

## VivarA S 40-8 250

| | |
|---|---|
| Minimum efficiency index (MEI) | ≥ 0.7 |
| Nominal width | DN 40 |
| Max. flow head H | 8 m |
| Overall length | 250 mm |
| Max. operating pressure | 16 bar |
| Media temperature | -20 °C…+140 °C |
| Ambient temperature | -20 °C…+40 °C |
| Net weight | 23 kg |

**Electrical data**

| | |
|---|---|
| Voltage | 3x400 V |
| Frequency | 50 Hz |
| Input power $P_1$ | 0.44 kW |
| Output power $P_2$ | 0.25 kW |
| Nominal current | 0.98 A |
| Speed | 4000 1/min |
| Motor protection | integrated |
| Protection rating | IP55 |
| Insulation class | F (155°C) |
| Motor efficiency class | IE5 |

**Required operating pressure at 500m a.s.l.**

| | |
|---|---|
| at a water temp. of 75 °C | 0.1 bar |
| at a water temp. of 95 °C | 0.5 bar |
| at a water temp. of 110 °C | 1 bar |
| for every ±100 m of altitude | 0.1 bar |

**Connction diagram**

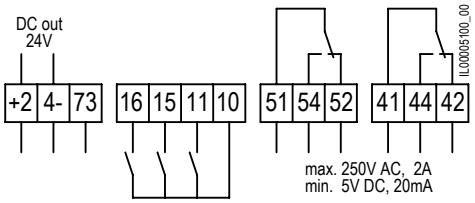


| | |
|---|---|
| **+24-** | 24 V DC out |
| **73** | Actual value input |
| **11,10** | External OFF or external ON (reversible) |
| **10,15** | Digital input minimum speed |
| **10,16** | Digital input maximum speed |
| **52, 54, 51** | Fault message or operating message |
| **42, 44, 41** | Operating or ready message |
| **L, N, PE** | Mains connection |

**Switch**

**1** Fault/operating message
**2** Operating/ready message
**3** External OFF or external ON

**Included in the scope of delivery**

– Sealing kit
– Screw kit

**Accessories**

– Biral Interface Modules
– Weld neck flange, pair PN10/16, DN40
– Intermediate piece DN40, PN16
– Sealing kits for flanges DN40, PN6 or PN16
– Base plate 235x235 KTL

| | **Art. no.** |
|---|---|
| VivarA S 40-8 250 | 7000000590 |

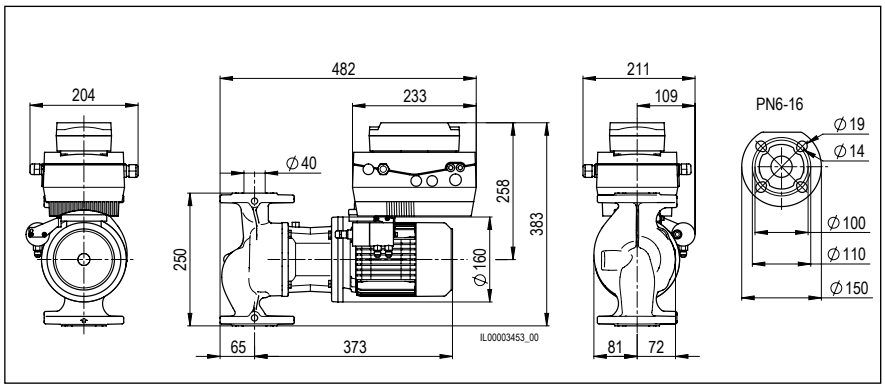


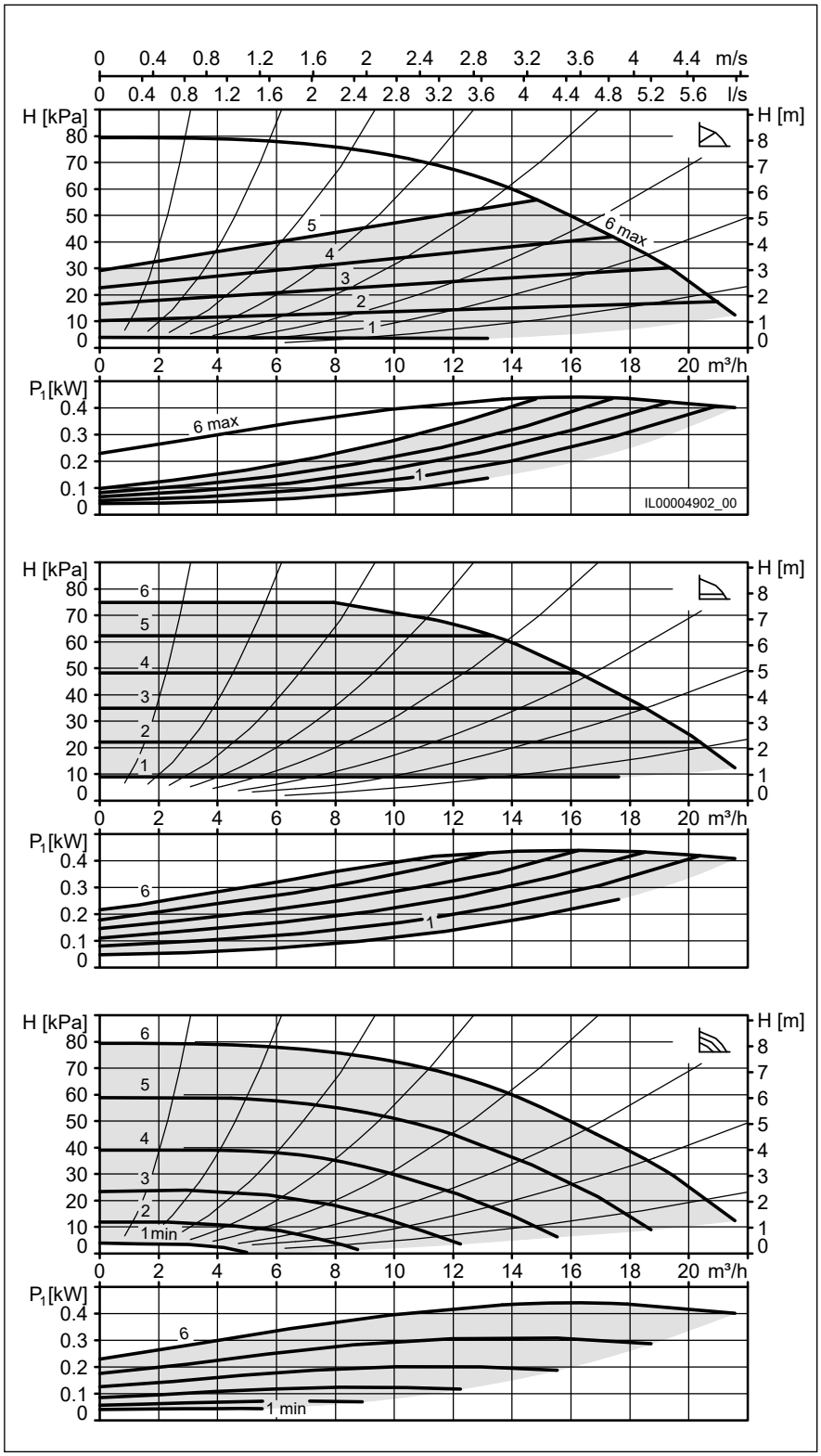

## VivarA S 40-12 250

| | |
|---|---|
| Minimum efficiency index (MEI) | ≥ 0.7 |
| Nominal width | DN 40 |
| Max. flow head H | 12 m |
| Overall length | 250 mm |
| Max. operating pressure | 16 bar |
| Media temperature | -20 °C…+140 °C |
| Ambient temperature | -20 °C…+40 °C |
| Net weight | 23 kg |

**Electrical data**

| | |
|---|---|
| Voltage | 3x400 V |
| Frequency | 50 Hz |
| Input power $P_1$ | 0.71 kW |
| Output power $P_2$ | 0.37 kW |
| Nominal current | 1.42 A |
| Speed | 4000 1/min |
| Motor protection | integrated |
| Protection rating | IP55 |
| Insulation class | F (155°C) |
| Motor efficiency class | IE5 |

**Required operating pressure at 500m a.s.l.**

| | |
|---|---|
| at a water temp. of 75 °C | 0.1 bar |
| at a water temp. of 95 °C | 0.5 bar |
| at a water temp. of 110 °C | 1 bar |
| for every ±100 m of altitude | 0.1 bar |

**Connction diagram**

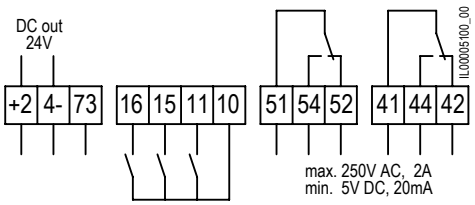


| | |
|---|---|
| **+24-** | 24 V DC out |
| **73** | Actual value input |
| **11,10** | External OFF or external ON (reversible) |
| **10,15** | Digital input minimum speed |
| **10,16** | Digital input maximum speed |
| **52, 54, 51** | Fault message or operating message |
| **42, 44, 41** | Operating or ready message |
| **L, N, PE** | Mains connection |

**Switch**

**1** Fault/operating message
**2** Operating/ready message
**3** External OFF or external ON

**Included in the scope of delivery**

– Sealing kit
– Screw kit

**Accessories**

– Biral Interface Modules
– Weld neck flange, pair PN10/16, DN40
– Intermediate piece DN40, PN16
– Sealing kits for flanges DN40, PN6 or PN16
– Base plate 235x235 KTL

| | **Art. no.** |
|---|---|
| VivarA S 40-12 250 | 7000000598 |

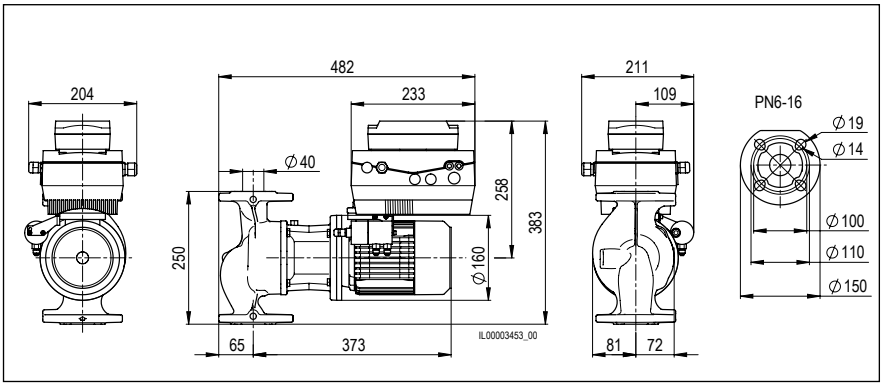


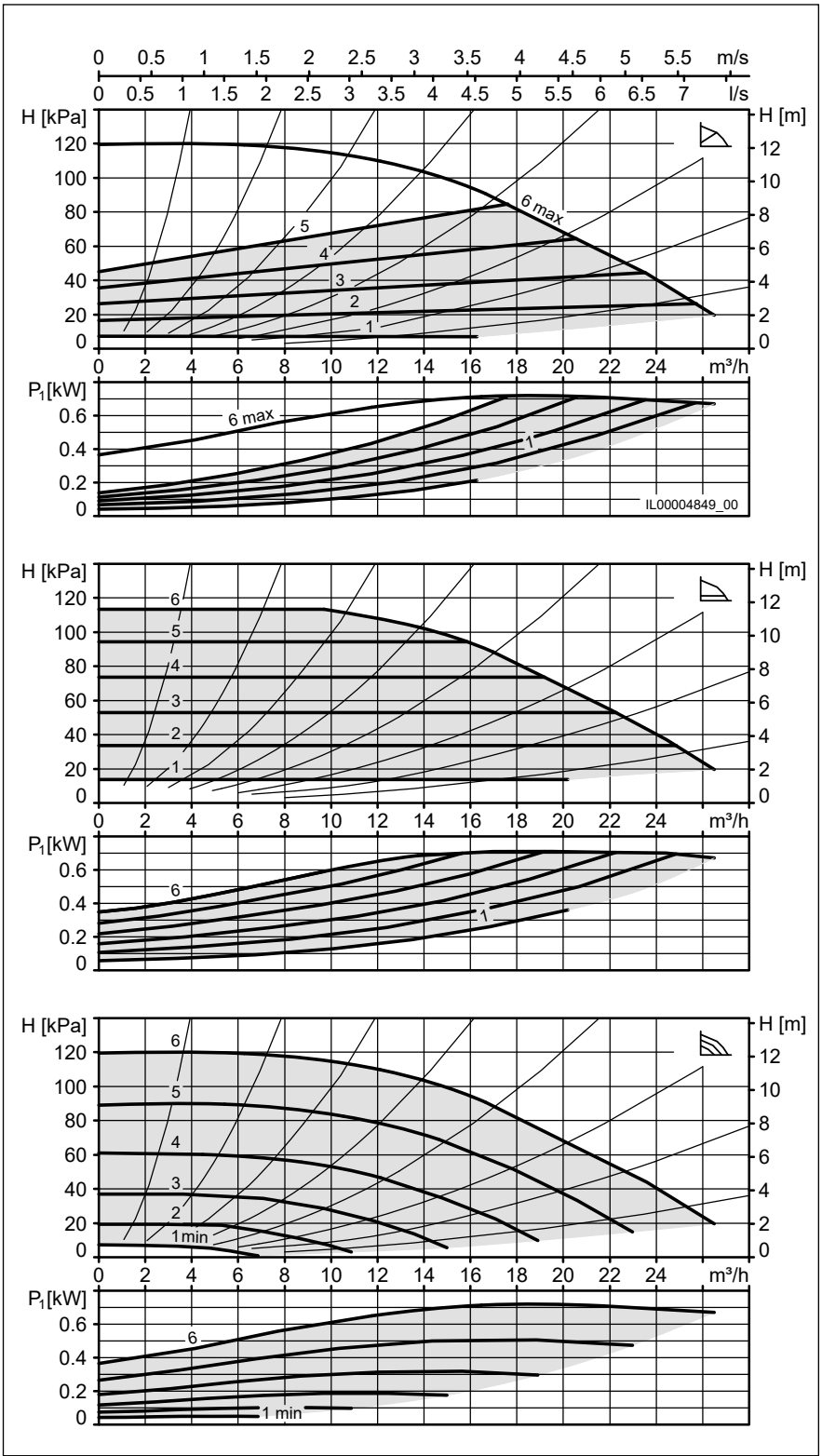

## VivarA S 40-15 250

| | |
|---|---|
| Minimum efficiency index (MEI) | ≥ 0.7 |
| Nominal width | DN 40 |
| Max. flow head H | 15 m |
| Overall length | 250 mm |
| Max. operating pressure | 16 bar |
| Media temperature | -20 °C…+140 °C |
| Ambient temperature | -20 °C…+40 °C |
| Net weight | 23 kg |

**Electrical data**

| | |
|---|---|
| Voltage | 3x400 V |
| Frequency | 50 Hz |
| Input power $P_1$ | 0.9 kW |
| Output power $P_2$ | 0.55 kW |
| Nominal current | 1.65 A |
| Speed | 4000 1/min |
| Motor protection | integrated |
| Protection rating | IP55 |
| Insulation class | F (155°C) |
| Motor efficiency class | IE5 |

**Required operating pressure at 500m a.s.l.**

| | |
|---|---|
| at a water temp. of 75 °C | 0.1 bar |
| at a water temp. of 95 °C | 0.5 bar |
| at a water temp. of 110 °C | 1 bar |
| for every ±100 m of altitude | 0.1 bar |

**Connction diagram**

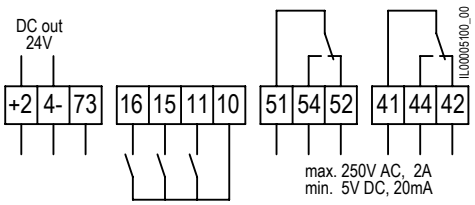


| | |
|---|---|
| **+24-** | 24 V DC out |
| **73** | Actual value input |
| **11,10** | External OFF or external ON (reversible) |
| **10,15** | Digital input minimum speed |
| **10,16** | Digital input maximum speed |
| **52, 54, 51** | Fault message or operating message |
| **42, 44, 41** | Operating or ready message |
| **L, N, PE** | Mains connection |

**Switch**

**1** Fault/operating message
**2** Operating/ready message
**3** External OFF or external ON

**Included in the scope of delivery**

– Sealing kit
– Screw kit

**Accessories**

– Biral Interface Modules
– Weld neck flange, pair PN10/16, DN40
– Intermediate piece DN40, PN16
– Sealing kits for flanges DN40, PN6 or PN16
– Base plate 235x235 KTL

| | **Art. no.** |
|---|---|
| VivarA S 40-15 250 | 7000000599 |

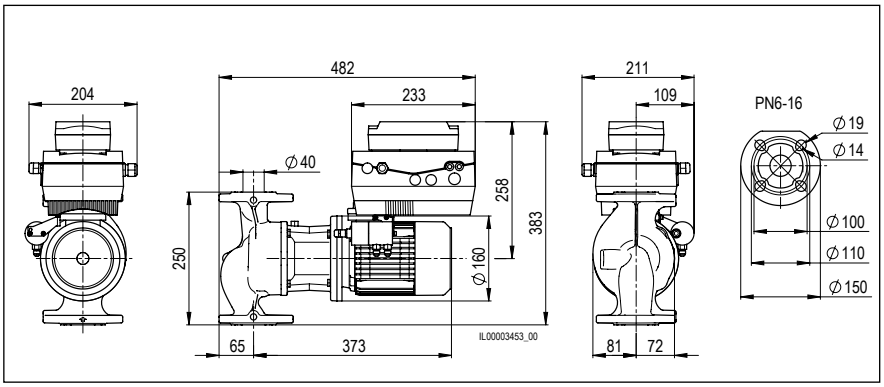


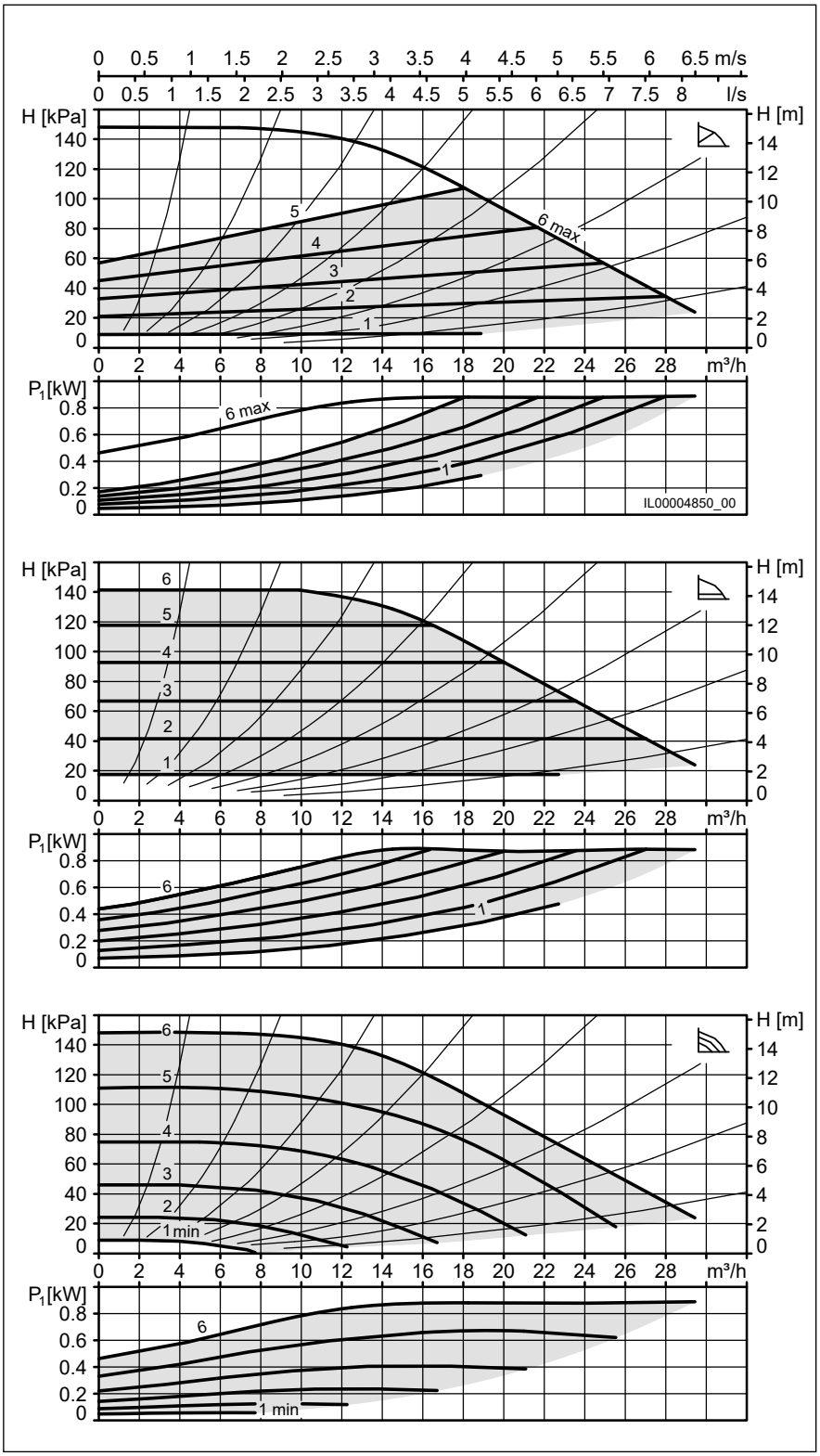

## VivarA S 40-18 250

| | |
|---|---|
| Minimum efficiency index (MEI) | ≥ 0.7 |
| Nominal width | DN 40 |
| Max. flow head H | 18 m |
| Overall length | 250 mm |
| Max. operating pressure | 16 bar |
| Media temperature | -20 °C…+140 °C |
| Ambient temperature | -20 °C…+40 °C |
| Net weight | 24 kg |

**Electrical data**

| | |
|---|---|
| Voltage | 3x400 V |
| Frequency | 50 Hz |
| Input power $P_1$ | 1.27 kW |
| Output power $P_2$ | 0.75 kW |
| Nominal current | 2.16 A |
| Speed | 5900 1/min |
| Motor protection | integrated |
| Protection rating | IP55 |
| Insulation class | F (155°C) |
| Motor efficiency class | IE5 |

**Required operating pressure at 500m a.s.l.**

| | |
|---|---|
| at a water temp. of 75 °C | 0.1 bar |
| at a water temp. of 95 °C | 0.5 bar |
| at a water temp. of 110 °C | 1 bar |
| for every ±100 m of altitude | 0.1 bar |

**Connction diagram**

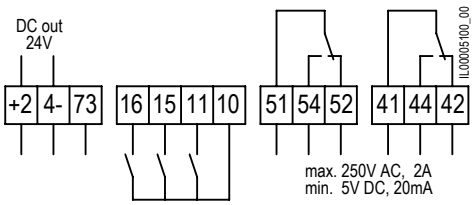


| | |
|---|---|
| **+24-** | 24 V DC out |
| **73** | Actual value input |
| **11,10** | External OFF or external ON (reversible) |
| **10,15** | Digital input minimum speed |
| **10,16** | Digital input maximum speed |
| **52, 54, 51** | Fault message or operating message |
| **42, 44, 41** | Operating or ready message |
| **L, N, PE** | Mains connection |

**Switch**

**1** Fault/operating message
**2** Operating/ready message
**3** External OFF or external ON

**Included in the scope of delivery**

– Sealing kit
– Screw kit

**Accessories**

– Biral Interface Modules
– Weld neck flange, pair PN10/16, DN40
– Intermediate piece DN40, PN16
– Sealing kits for flanges DN40, PN6 or PN16
– Base plate 235x235 KTL

| | **Art. no.** |
|---|---|
| VivarA S 40-18 250 | 7000000600 |

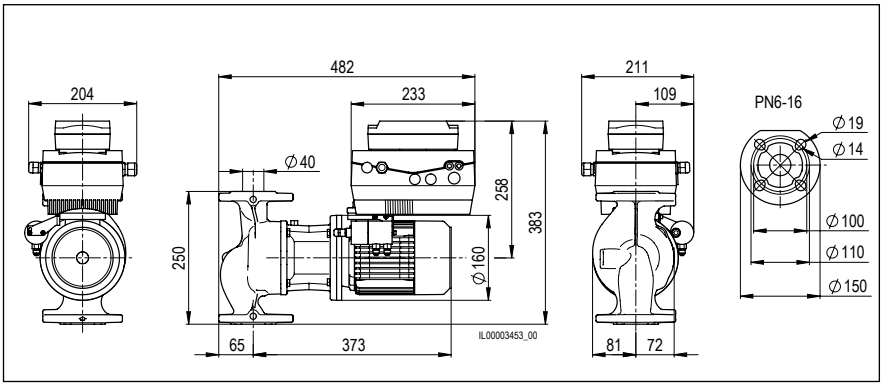


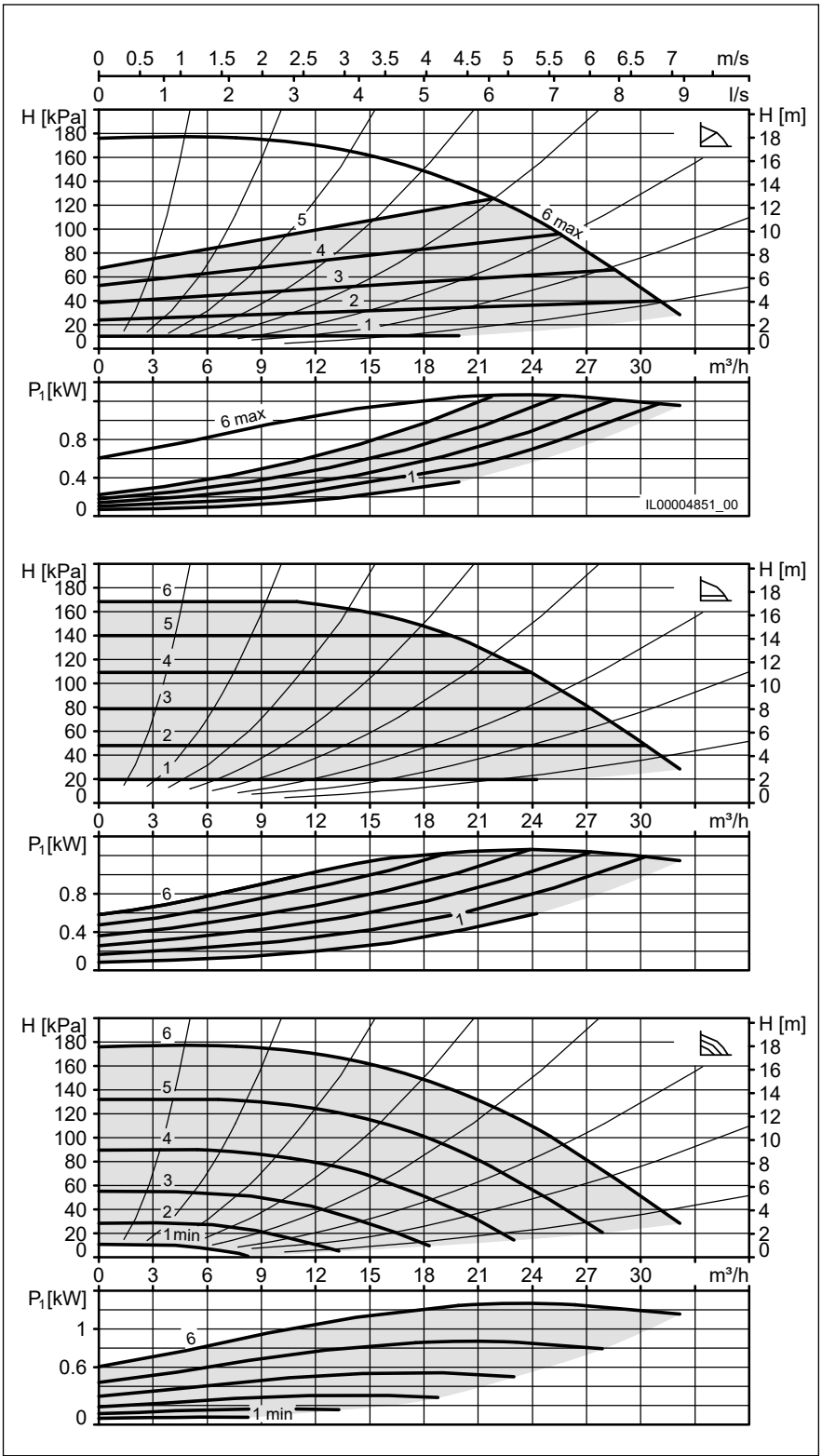

## VivarA S 40-20 250

| | |
|---|---|
| Minimum efficiency index (MEI) | ≥ 0.7 |
| Nominal width | DN 40 |
| Max. flow head H | 20 m |
| Overall length | 250 mm |
| Max. operating pressure | 16 bar |
| Media temperature | -20 °C…+140 °C |
| Ambient temperature | -20 °C…+40 °C |
| Net weight | 24 kg |

**Electrical data**

| | |
|---|---|
| Voltage | 3x400 V |
| Frequency | 50 Hz |
| Input power $P_1$ | 1.37 kW |
| Output power $P_2$ | 1.1 kW |
| Nominal current | 2.34 A |
| Speed | 5900 1/min |
| Motor protection | integrated |
| Protection rating | IP55 |
| Insulation class | F (155°C) |
| Motor efficiency class | IE5 |

**Required operating pressure at 500m a.s.l.**

| | |
|---|---|
| at a water temp. of 75 °C | 0.1 bar |
| at a water temp. of 95 °C | 0.5 bar |
| at a water temp. of 110 °C | 1 bar |
| for every ±100 m of altitude | 0.1 bar |

**Connction diagram**

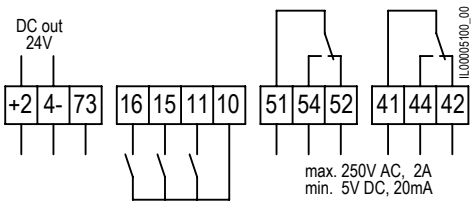


| | |
|---|---|
| **+24-** | 24 V DC out |
| **73** | Actual value input |
| **11,10** | External OFF or external ON (reversible) |
| **10,15** | Digital input minimum speed |
| **10,16** | Digital input maximum speed |
| **52, 54, 51** | Fault message or operating message |
| **42, 44, 41** | Operating or ready message |
| **L, N, PE** | Mains connection |

**Switch**

**1** Fault/operating message
**2** Operating/ready message
**3** External OFF or external ON

**Included in the scope of delivery**

– Sealing kit
– Screw kit

**Accessories**

– Biral Interface Modules
– Weld neck flange, pair PN10/16, DN40
– Intermediate piece DN40, PN16
– Sealing kits for flanges DN40, PN6 or PN16
– Base plate 235x235 KTL

| | **Art. no.** |
|---|---|
| VivarA S 40-20 250 | 7000000601 |

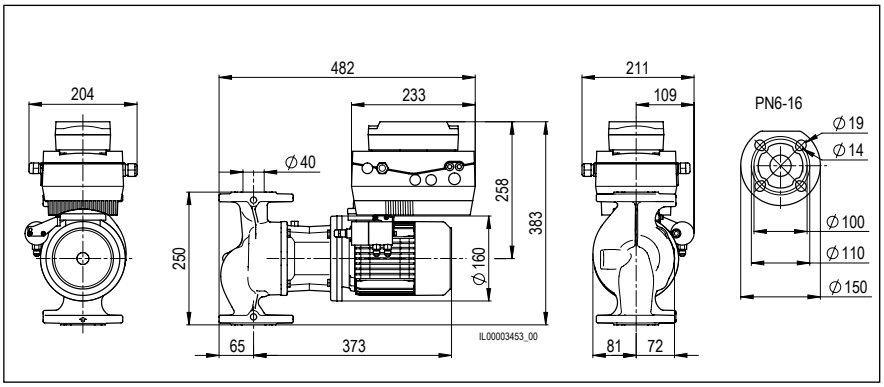


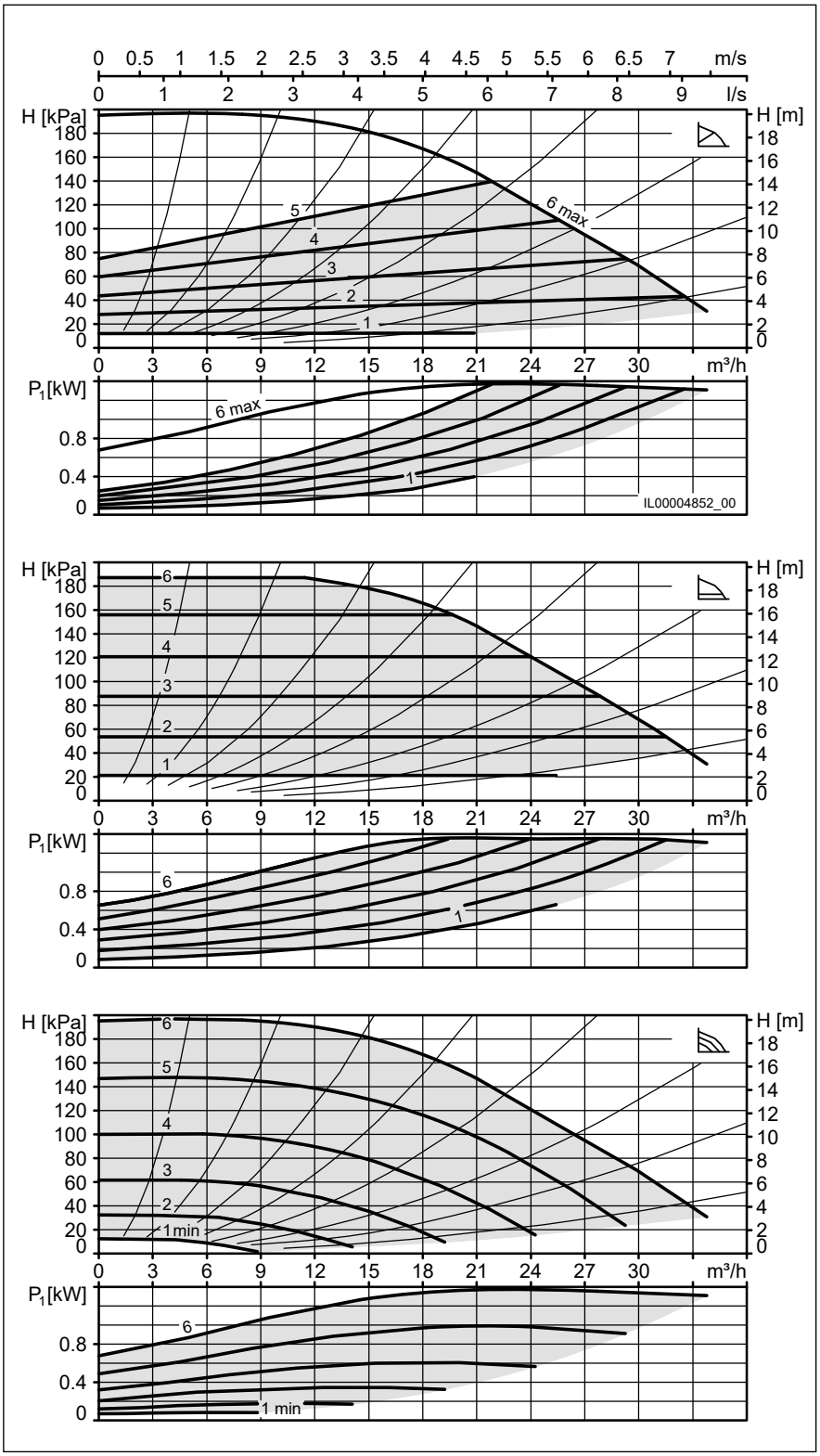

## VivarA S 40-24 250

| | |
|---|---|
| Minimum efficiency index (MEI) | ≥ 0.7 |
| Nominal width | DN 40 |
| Max. flow head H | 24 m |
| Overall length | 250 mm |
| Max. operating pressure | 16 bar |
| Media temperature | -20 °C…+140 °C |
| Ambient temperature | -20 °C…+40 °C |
| Net weight | 24 kg |

**Electrical data**

| | |
|---|---|
| Voltage | 3x400 V |
| Frequency | 50 Hz |
| Input power $P_1$ | 1.84 kW |
| Output power $P_2$ | 1.5 kW |
| Nominal current | 2.99 A |
| Speed | 5900 1/min |
| Motor protection | integrated |
| Protection rating | IP55 |
| Insulation class | F (155°C) |
| Motor efficiency class | IE5 |

**Required operating pressure at 500m a.s.l.**

| | |
|---|---|
| at a water temp. of 75 °C | 0.1 bar |
| at a water temp. of 95 °C | 0.5 bar |
| at a water temp. of 110 °C | 1 bar |
| for every ±100 m of altitude | 0.1 bar |

**Connction diagram**

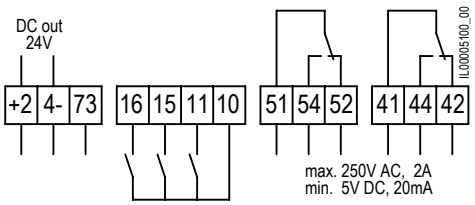


| | |
|---|---|
| **+24-** | 24 V DC out |
| **73** | Actual value input |
| **11,10** | External OFF or external ON (reversible) |
| **10,15** | Digital input minimum speed |
| **10,16** | Digital input maximum speed |
| **52, 54, 51** | Fault message or operating message |
| **42, 44, 41** | Operating or ready message |
| **L, N, PE** | Mains connection |

**Switch**

**1** Fault/operating message
**2** Operating/ready message
**3** External OFF or external ON

**Included in the scope of delivery**

– Sealing kit
– Screw kit

**Accessories**

– Biral Interface Modules
– Weld neck flange, pair PN10/16, DN40
– Intermediate piece DN40, PN16
– Sealing kits for flanges DN40, PN6 or PN16
– Base plate 235x235 KTL

| | **Art. no.** |
|---|---|
| VivarA S 40-24 250 | 7000000602 |

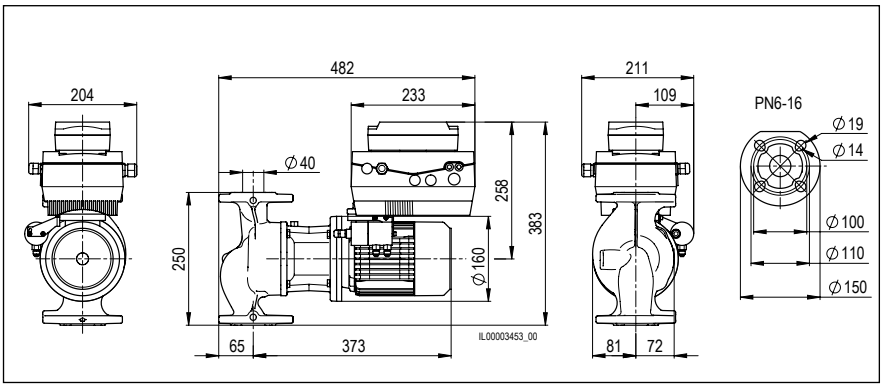


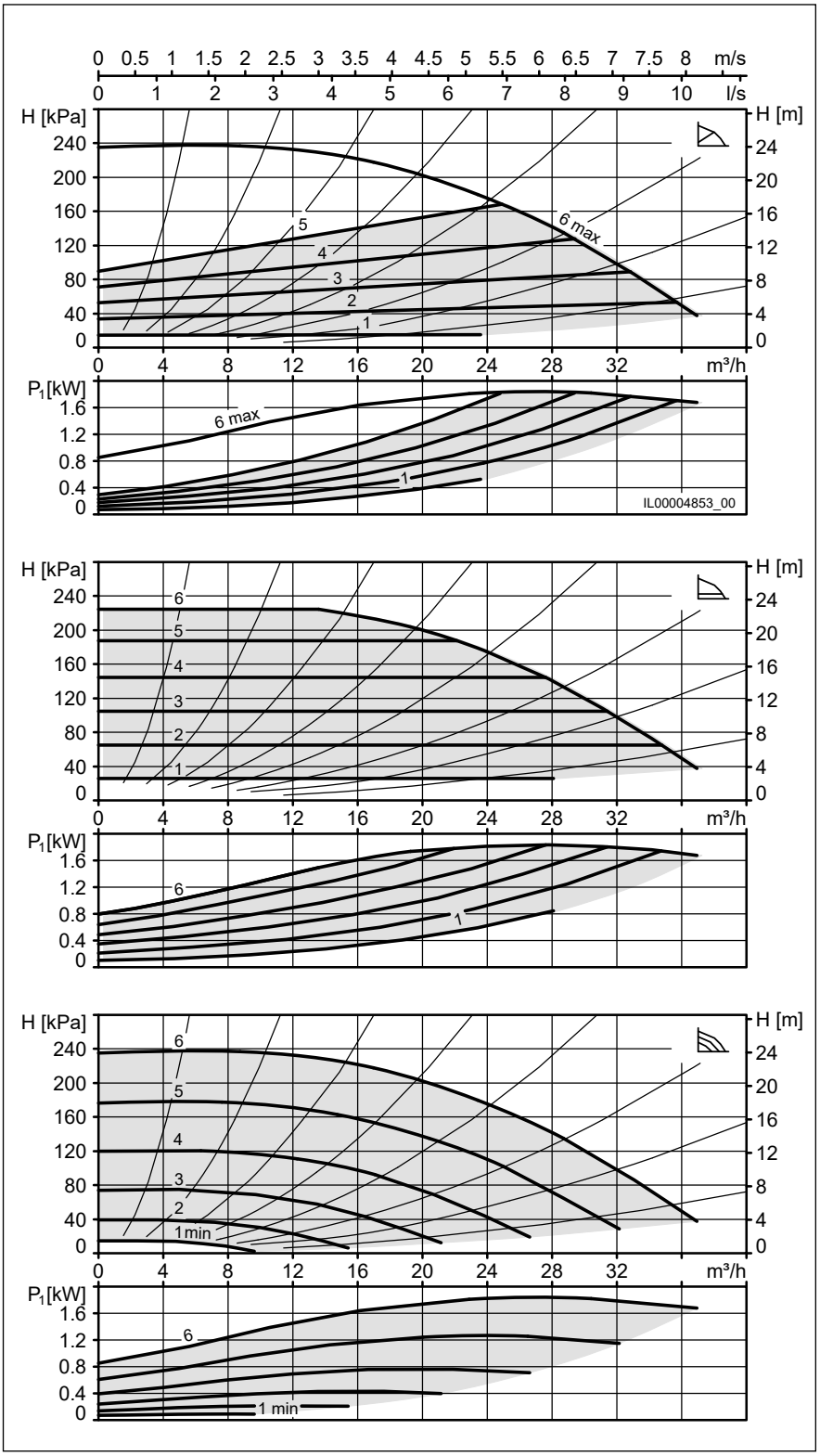

## VivarA M 40-30 340

| | |
|---|---|
| Minimum efficiency index (MEI) | ≥ 0.52 |
| Nominal width | DN 40 |
| Max. flow head H | 30 m |
| Overall length | 340 mm |
| Max. operating pressure | 16 bar |
| Media temperature | -20 °C…+140 °C |
| Ambient temperature | -20 °C…+40 °C |
| Net weight | 48 kg |

**Electrical data**

| | |
|---|---|
| Voltage | 3x400 V |
| Frequency | 50 Hz |
| Input power $P_1$ | 3.24 kW |
| Output power $P_2$ | 3 kW |
| Nominal current | 5.16 A |
| Speed | 3000 1/min |
| Motor protection | integrated |
| Protection rating | IP55 |
| Insulation class | F (155°C) |
| Motor efficiency class | IE5 |

**Required operating pressure at 500m a.s.l.**

| | |
|---|---|
| at a water temp. of 75 °C | 0.1 bar |
| at a water temp. of 95 °C | 0.5 bar |
| at a water temp. of 110 °C | 1 bar |
| for every ±100 m of altitude | 0.1 bar |

**Connction diagram**

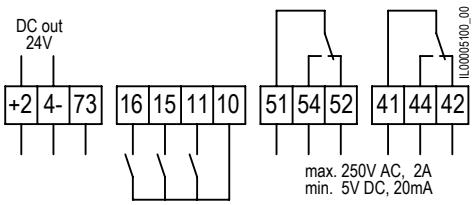


| | |
|---|---|
| **+24-** | 24 V DC out |
| **73** | Actual value input |
| **11,10** | External OFF or external ON (reversible) |
| **10,15** | Digital input minimum speed |
| **10,16** | Digital input maximum speed |
| **52, 54, 51** | Fault message or operating message |
| **42, 44, 41** | Operating or ready message |
| **L, N, PE** | Mains connection |

**Switch**

**1** Fault/operating message
**2** Operating/ready message
**3** External OFF or external ON

**Included in the scope of delivery**

– Sealing kit
– Screw kit

**Accessories**

– Biral Interface Modules
– Weld neck flange, pair PN10/16, DN40
– Intermediate piece DN40, PN16
– Sealing kits for flanges DN40, PN6 or PN16
– Base plate 235x235 KTL

| | **Art. no.** |
|---|---|
| VivarA M 40-30 340 | 7000000632 |

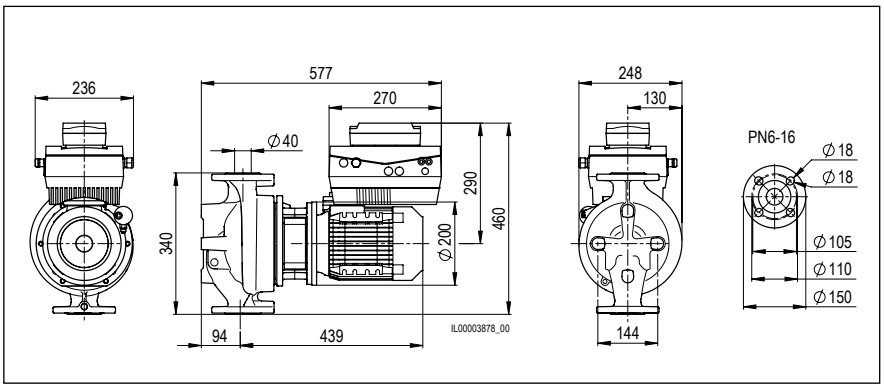


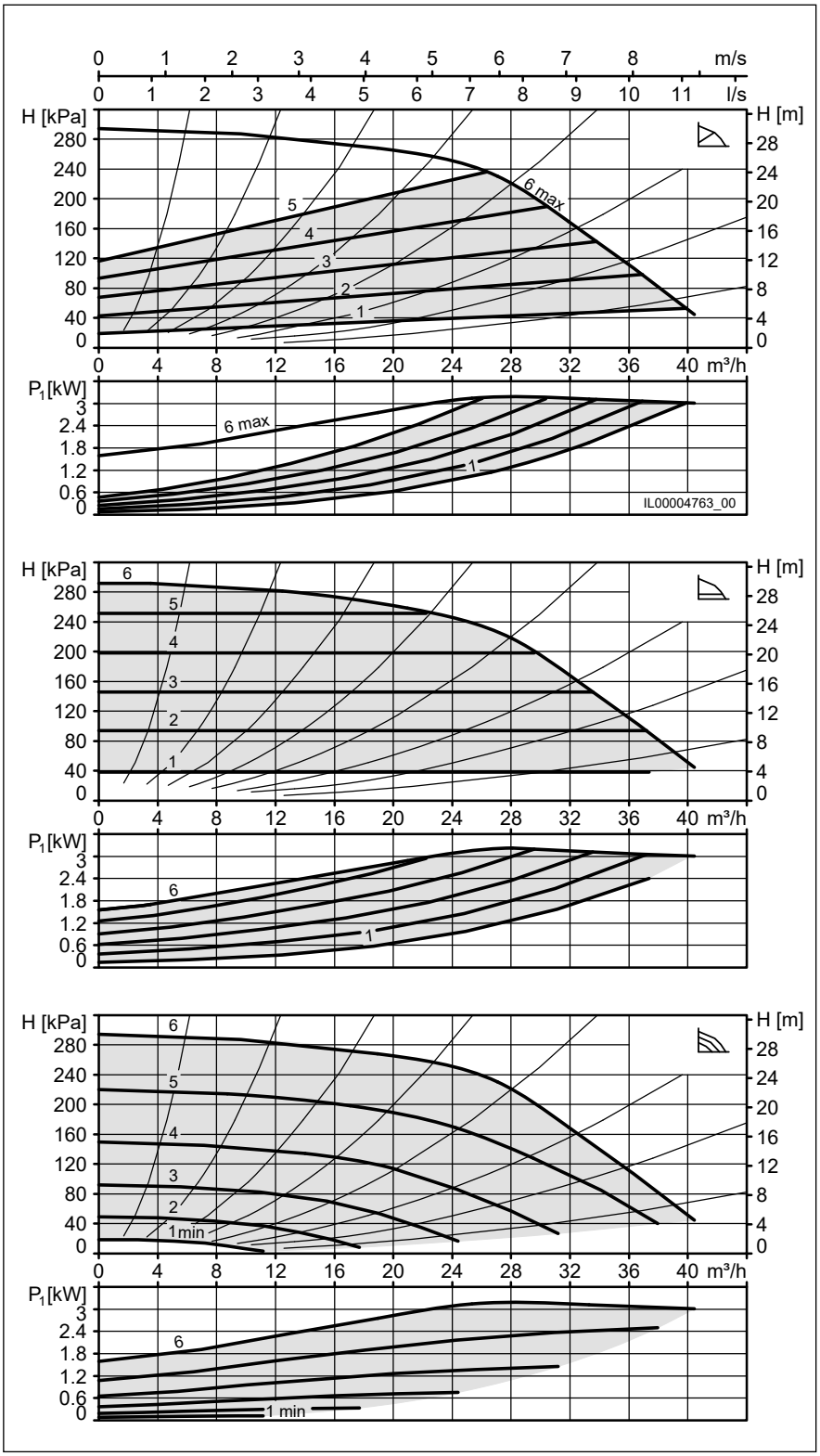

## VivarA M 40-36 340

| | |
|---|---|
| Minimum efficiency index (MEI) | ≥ 0.52 |
| Nominal width | DN 40 |
| Max. flow head H | 36 m |
| Overall length | 340 mm |
| Max. operating pressure | 16 bar |
| Media temperature | -20 °C…+140 °C |
| Ambient temperature | -20 °C…+40 °C |
| Net weight | 48 kg |

**Electrical data**

| | |
|---|---|
| Voltage | 3x400 V |
| Frequency | 50 Hz |
| Input power $P_1$ | 4.41 kW |
| Output power $P_2$ | 4 kW |
| Nominal current | 6.9 A |
| Speed | 3000 1/min |
| Motor protection | integrated |
| Protection rating | IP55 |
| Insulation class | F (155°C) |
| Motor efficiency class | IE5 |

**Required operating pressure at 500m a.s.l.**

| | |
|---|---|
| at a water temp. of 75 °C | 0.1 bar |
| at a water temp. of 95 °C | 0.5 bar |
| at a water temp. of 110 °C | 1 bar |
| for every ±100 m of altitude | 0.1 bar |

**Connction diagram**

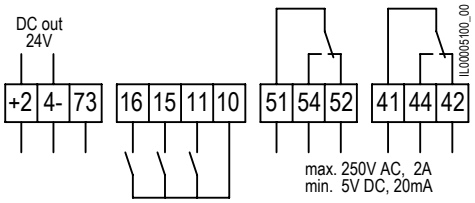


| | |
|---|---|
| **+24-** | 24 V DC out |
| **73** | Actual value input |
| **11,10** | External OFF or external ON (reversible) |
| **10,15** | Digital input minimum speed |
| **10,16** | Digital input maximum speed |
| **52, 54, 51** | Fault message or operating message |
| **42, 44, 41** | Operating or ready message |
| **L, N, PE** | Mains connection |

**Switch**

**1** Fault/operating message
**2** Operating/ready message
**3** External OFF or external ON

**Included in the scope of delivery**

– Sealing kit
– Screw kit

**Accessories**

– Biral Interface Modules
– Weld neck flange, pair PN10/16, DN40
– Intermediate piece DN40, PN16
– Sealing kits for flanges DN40, PN6 or PN16
– Base plate 235x235 KTL

| | **Art. no.** |
|---|---|
| VivarA M 40-36 340 | 7000000633 |

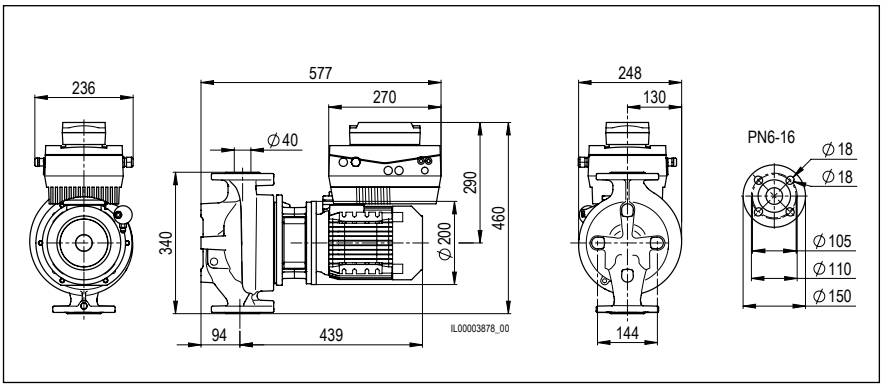


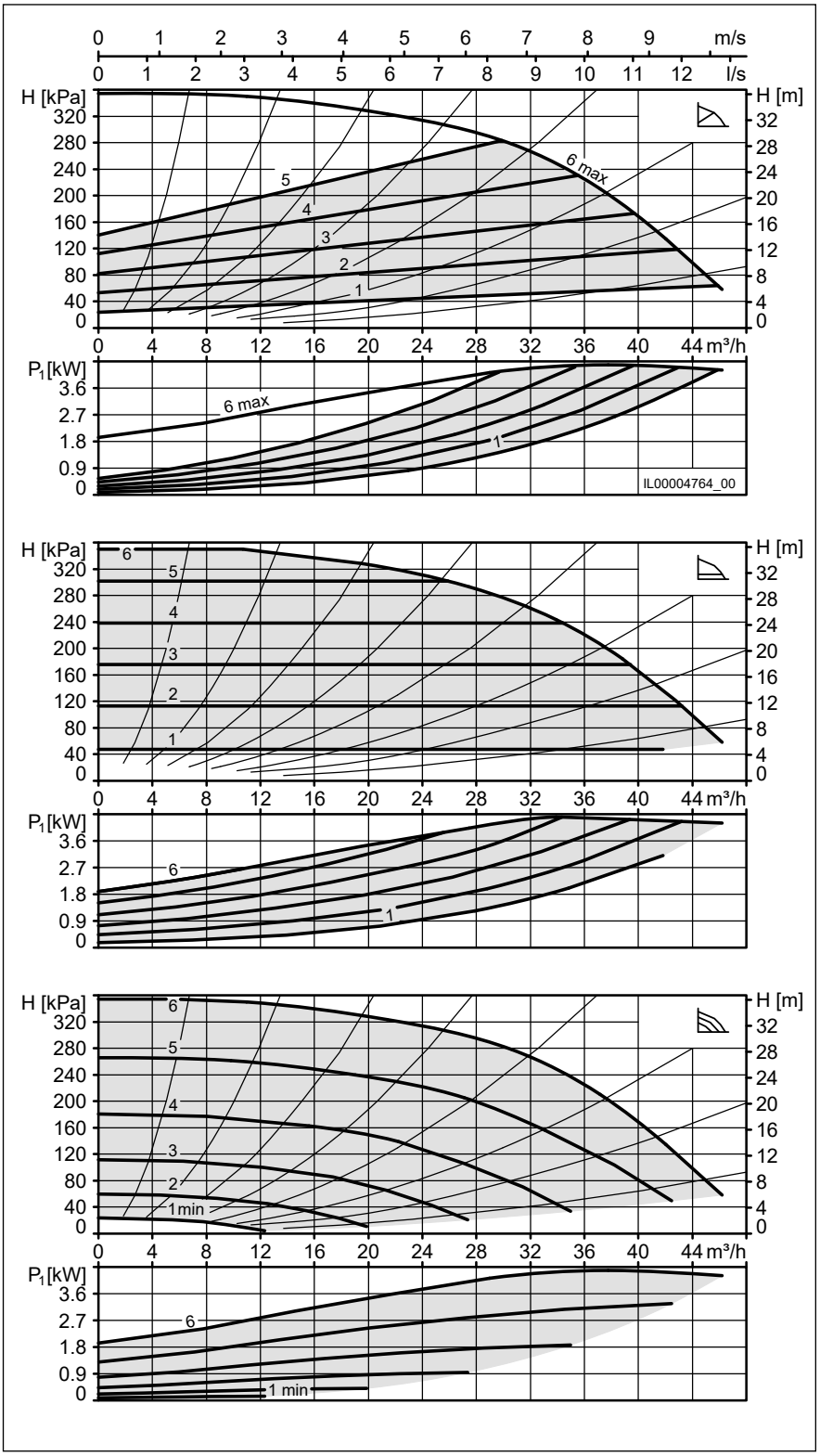

## VivarA M 40-43 340

| | |
|---|---|
| Minimum efficiency index (MEI) | ≥ 0.70 |
| Nominal width | DN 40 |
| Max. flow head H | 43 m |
| Overall length | 340 mm |
| Max. operating pressure | 16 bar |
| Media temperature | -20 °C…+140 °C |
| Ambient temperature | -20 °C…+40 °C |
| Net weight | 54 kg |

**Electrical data**

| | |
|---|---|
| Voltage | 3x400 V |
| Frequency | 50 Hz |
| Input power $P_1$ | 6.16 kW |
| Output power $P_2$ | 5.5 kW |
| Nominal current | 9.92 A |
| Speed | 3000 1/min |
| Motor protection | integrated |
| Protection rating | IP55 |
| Insulation class | F (155°C) |
| Motor efficiency class | IE5 |

**Required operating pressure at 500m a.s.l.**

| | |
|---|---|
| at a water temp. of 75 °C | 0.1 bar |
| at a water temp. of 95 °C | 0.5 bar |
| at a water temp. of 110 °C | 1 bar |
| for every ±100 m of altitude | 0.1 bar |

**Connction diagram**

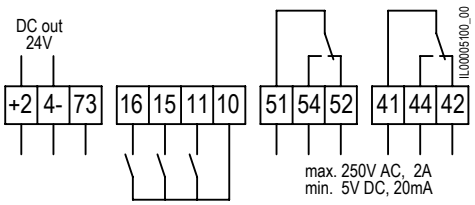


| | |
|---|---|
| **+24-** | 24 V DC out |
| **73** | Actual value input |
| **11,10** | External OFF or external ON (reversible) |
| **10,15** | Digital input minimum speed |
| **10,16** | Digital input maximum speed |
| **52, 54, 51** | Fault message or operating message |
| **42, 44, 41** | Operating or ready message |
| **L, N, PE** | Mains connection |

**Switch**

**1** Fault/operating message
**2** Operating/ready message
**3** External OFF or external ON

**Included in the scope of delivery**

– Sealing kit
– Screw kit

**Accessories**

– Biral Interface Modules
– Weld neck flange, pair PN10/16, DN40
– Intermediate piece DN40, PN16
– Sealing kits for flanges DN40, PN6 or PN16
– Base plate 235x235 KTL

| | **Art. no.** |
|---|---|
| VivarA M 40-43 340 | 7000000634 |

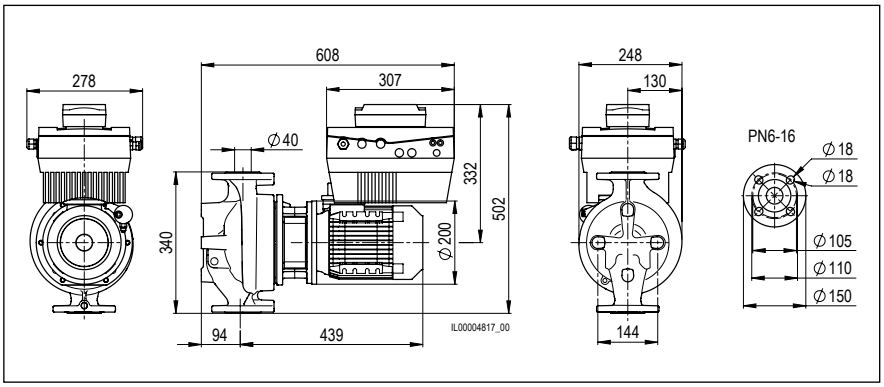


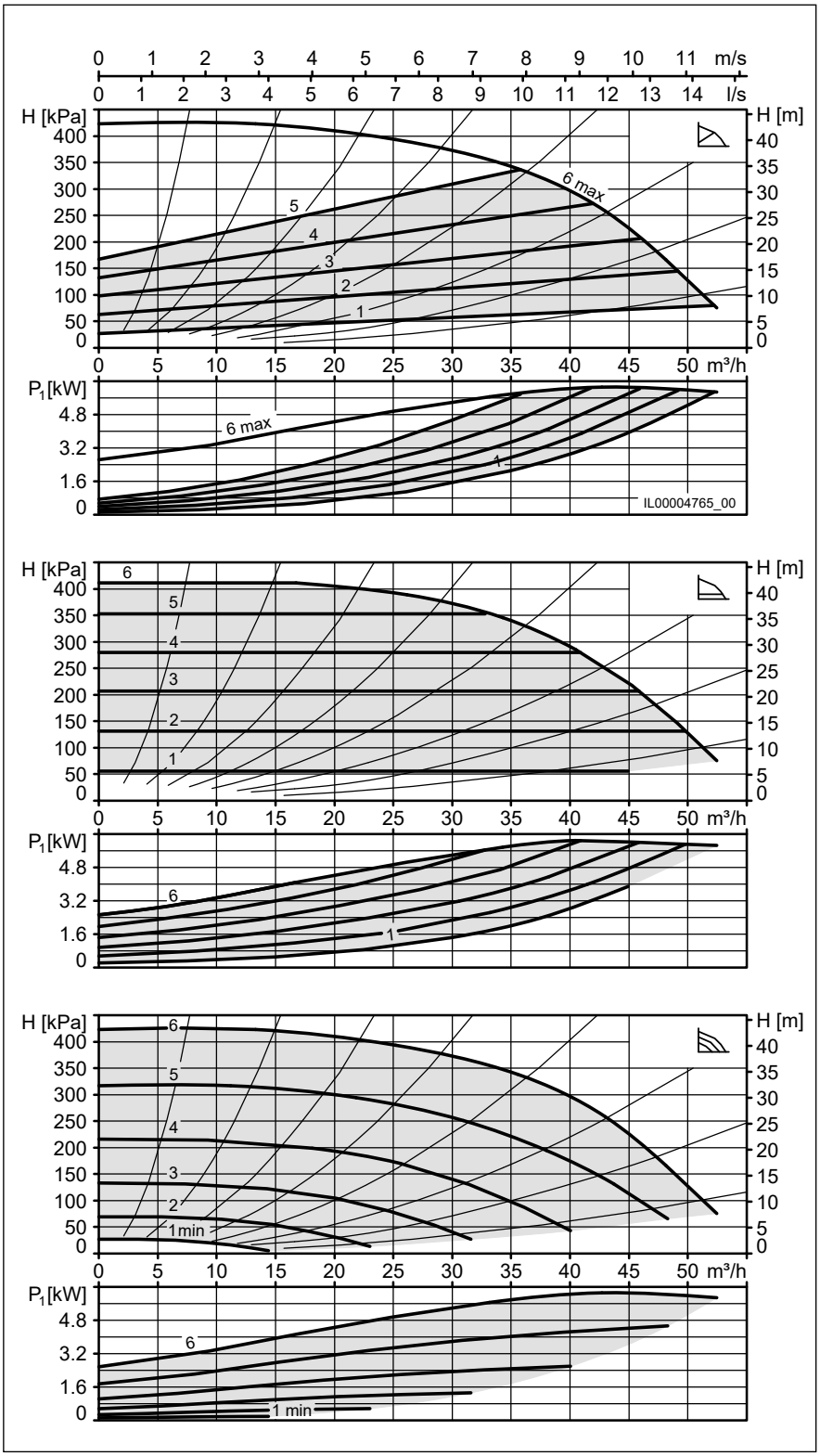


Datasheets

## VivarA M 40-53 440

| | |
|---|---|
| Minimum efficiency index (MEI) | ≥ 0.7 |
| Nominal width | DN 40 |
| Max. flow head H | 53 m |
| Overall length | 440 mm |
| Max. operating pressure | 16 bar |
| Media temperature | -20 °C…+140 °C |
| Ambient temperature | -20 °C…+40 °C |
| Net weight | 78 kg |

**Electrical data**

| | |
|---|---|
| Voltage | 3x400 V |
| Frequency | 50 Hz |
| Input power $P_1$ | 7.83 kW |
| Output power $P_2$ | 7.5 kW |
| Nominal current | 12.43 A |
| Speed | 3000 1/min |
| Motor protection | integrated |
| Protection rating | IP55 |
| Insulation class | F (155°C) |
| Motor efficiency class | IE5 |

**Required operating pressure at 500m a.s.l.**

| | |
|---|---|
| at a water temp. of 75 °C | 0.1 bar |
| at a water temp. of 95 °C | 0.5 bar |
| at a water temp. of 110 °C | 1 bar |
| for every ±100 m of altitude | 0.1 bar |

**Connction diagram**

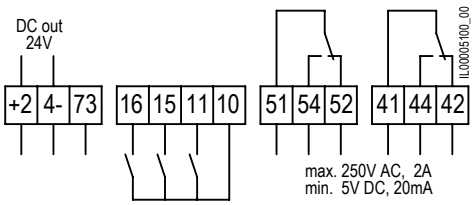


| | |
|---|---|
| **+24-** | 24 V DC out |
| **73** | Actual value input |
| **11,10** | External OFF or external ON (reversible) |
| **10,15** | Digital input minimum speed |
| **10,16** | Digital input maximum speed |
| **52, 54, 51** | Fault message or operating message |
| **42, 44, 41** | Operating or ready message |
| **L, N, PE** | Mains connection |

**Switch**

**1** Fault/operating message
**2** Operating/ready message
**3** External OFF or external ON

**Included in the scope of delivery**

– Sealing kit
– Screw kit

**Accessories**

– Biral Interface Modules
– Weld neck flange, pair PN10/16, DN40
– Intermediate piece DN40, PN16
– Sealing kits for flanges DN40, PN6 or PN16
– Base plate 235x235 KTL

| | **Art. no.** |
|---|---|
| VivarA M 40-53 440 | 7000000635 |

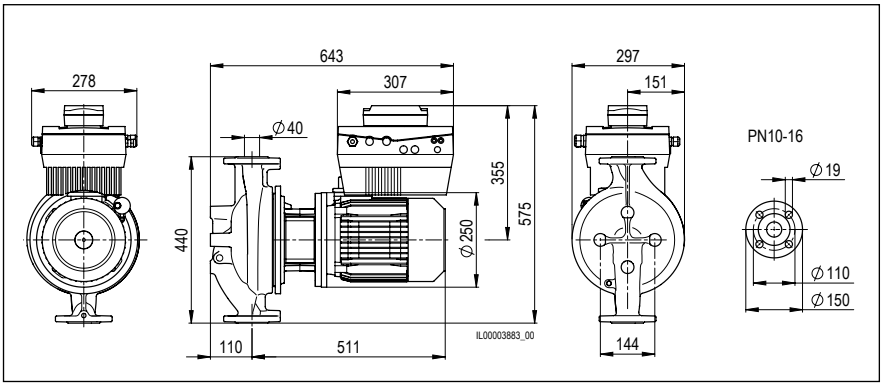


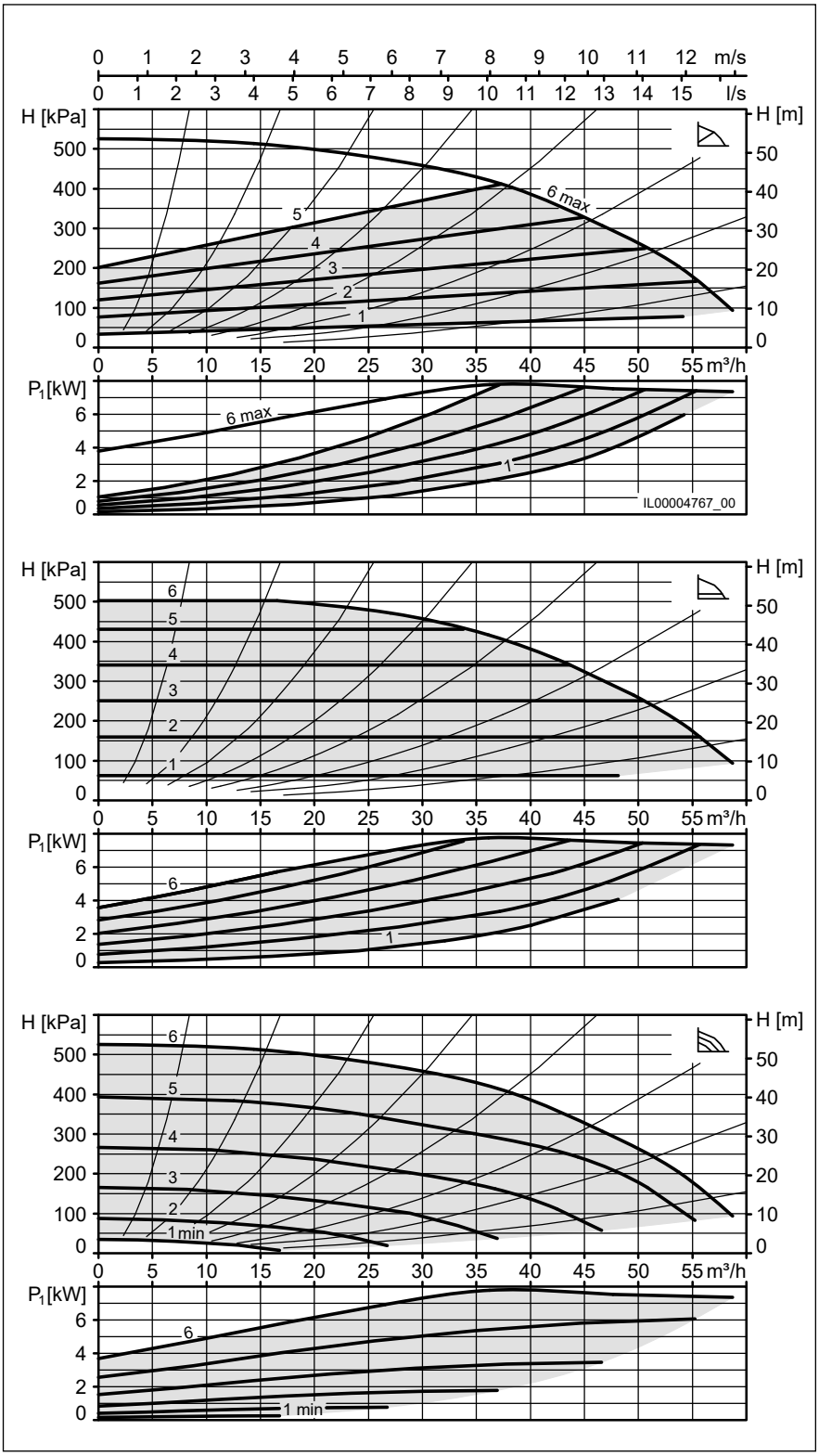




Datasheets

## VivarA M 40-63 440

| | |
|---|---|
| Minimum efficiency index (MEI) | ≥ 0.7 |
| Nominal width | DN 40 |
| Max. flow head H | 63 m |
| Overall length | 440 mm |
| Max. operating pressure | 16 bar |
| Media temperature | -20 °C…+140 °C |
| Ambient temperature | -20 °C…+40 °C |
| Net weight | 96 kg |

**Electrical data**

| | |
|---|---|
| Voltage | 3x400 V |
| Frequency | 50 Hz |
| Input power $P_1$ | 11.5 kW |
| Output power $P_2$ | 11 kW |
| Nominal current | 18.73 A |
| Speed | 3000 1/min |
| Motor protection | integrated |
| Protection rating | IP55 |
| Insulation class | F (155°C) |
| Motor efficiency class | IE5 |

**Required operating pressure at 500m a.s.l.**

| | |
|---|---|
| at a water temp. of 75 °C | 0.1 bar |
| at a water temp. of 95 °C | 0.5 bar |
| at a water temp. of 110 °C | 1 bar |
| for every ±100 m of altitude | 0.1 bar |

**Connction diagram**

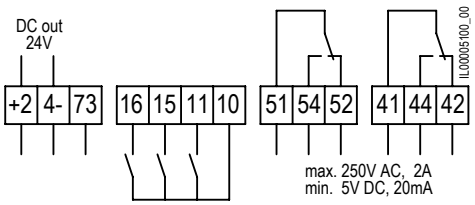


| | |
|---|---|
| **+24-** | 24 V DC out |
| **73** | Actual value input |
| **11,10** | External OFF or external ON (reversible) |
| **10,15** | Digital input minimum speed |
| **10,16** | Digital input maximum speed |
| **52, 54, 51** | Fault message or operating message |
| **42, 44, 41** | Operating or ready message |
| **L, N, PE** | Mains connection |

**Switch**

**1** Fault/operating message
**2** Operating/ready message
**3** External OFF or external ON

**Included in the scope of delivery**

– Sealing kit
– Screw kit

**Accessories**

– Biral Interface Modules
– Weld neck flange, pair PN10/16, DN40
– Intermediate piece DN40, PN16
– Sealing kits for flanges DN40, PN6 or PN16

| | **Art. no.** |
|---|---|
| VivarA M 40-63 440 | 7000000636 |

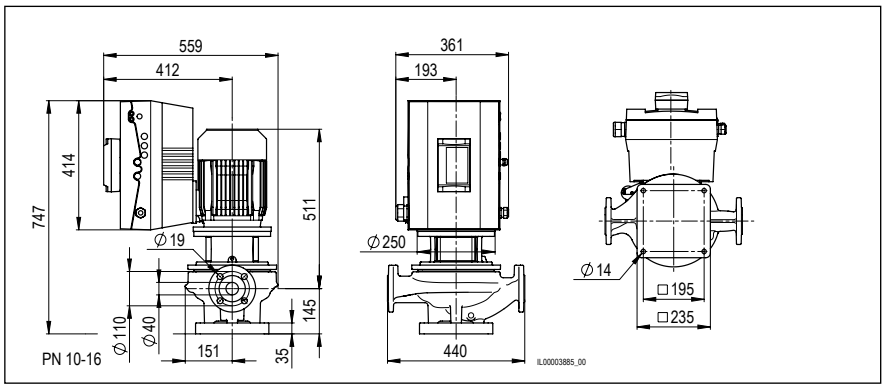


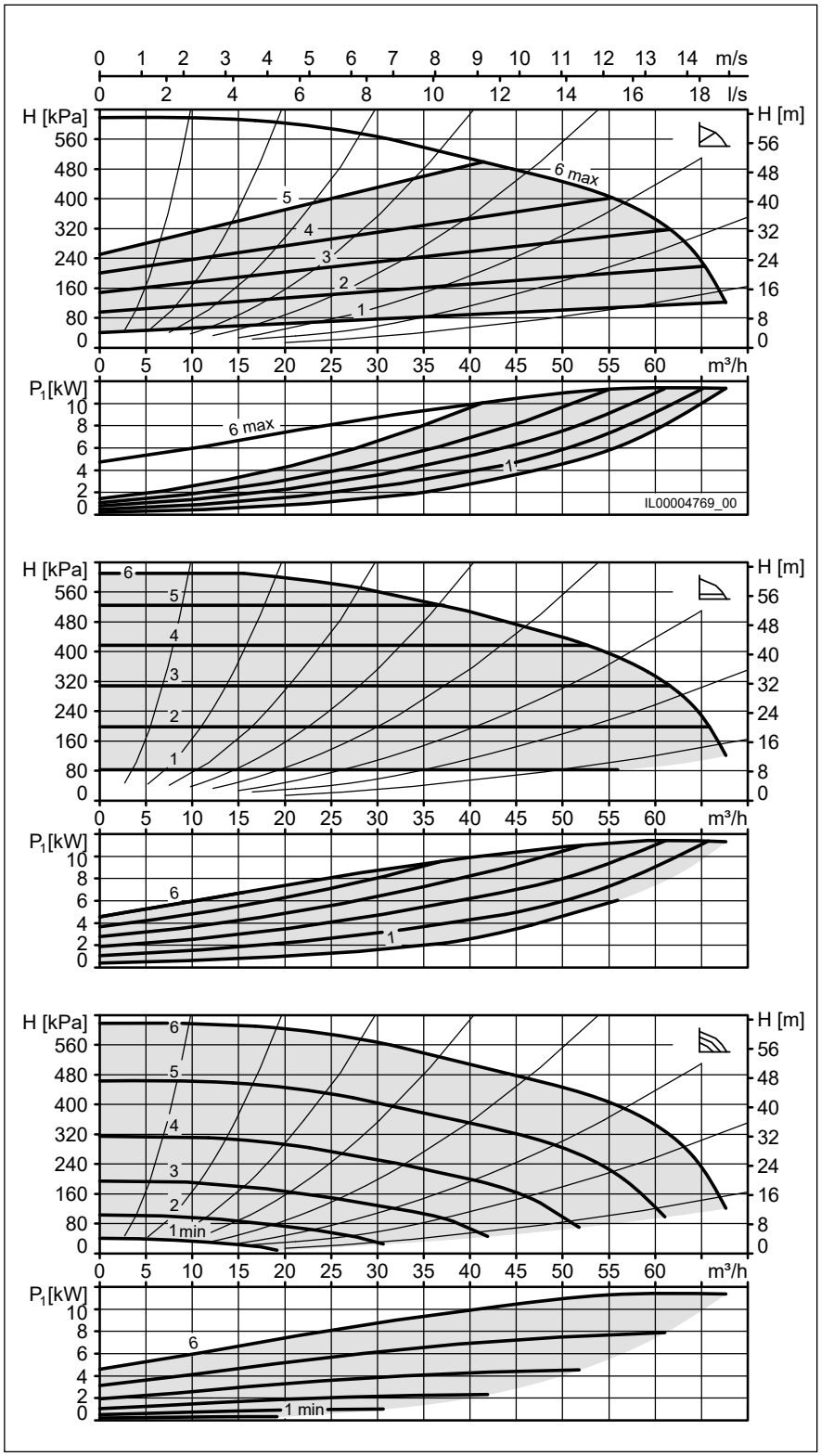

## VivarA S 50-6 270

| | |
|---|---|
| Minimum efficiency index (MEI) | ≥ 0.7 |
| Nominal width | DN 50 |
| Max. flow head H | 6 m |
| Overall length | 270 mm |
| Max. operating pressure | 16 bar |
| Media temperature | -20 °C…+140 °C |
| Ambient temperature | -20 °C…+40 °C |
| Net weight | 25 kg |

**Electrical data**

| | |
|---|---|
| Voltage | 3x400 V |
| Frequency | 50 Hz |
| Input power $P_1$ | 0.43 kW |
| Output power $P_2$ | 0.37 kW |
| Nominal current | 0.98 A |
| Speed | 4000 1/min |
| Motor protection | integrated |
| Protection rating | IP55 |
| Insulation class | F (155°C) |
| Motor efficiency class | IE5 |

**Required operating pressure at 500m a.s.l.**

| | |
|---|---|
| at a water temp. of 75 °C | 0.7 bar |
| at a water temp. of 95 °C | 1.2 bar |
| at a water temp. of 110 °C | 1.7 bar |
| for every ±100 m of altitude | 0.1 bar |

**Connction diagram**

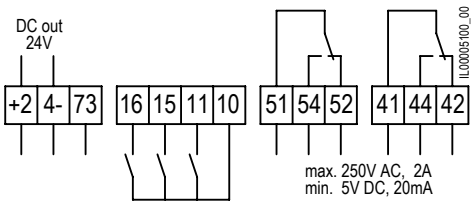


| | |
|---|---|
| **+24-** | 24 V DC out |
| **73** | Actual value input |
| **11,10** | External OFF or external ON (reversible) |
| **10,15** | Digital input minimum speed |
| **10,16** | Digital input maximum speed |
| **52, 54, 51** | Fault message or operating message |
| **42, 44, 41** | Operating or ready message |
| **L, N, PE** | Mains connection |

**Switch**

**1** Fault/operating message
**2** Operating/ready message
**3** External OFF or external ON

**Included in the scope of delivery**

– Sealing kit
– Screw kit

**Accessories**

– Biral Interface Modules
– Weld neck flange, pair PN10/16, DN50
– Intermediate piece DN50, 170mm, PN16
– Sealing kits for flanges DN50, PN6 or PN16
– Base plate 235x235 KTL

| | **Art. no.** |
|---|---|
| VivarA S 50-6 270 | 7000000603 |

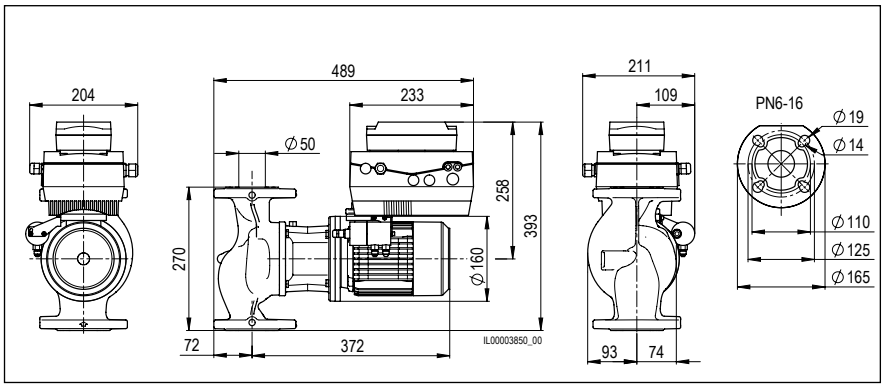


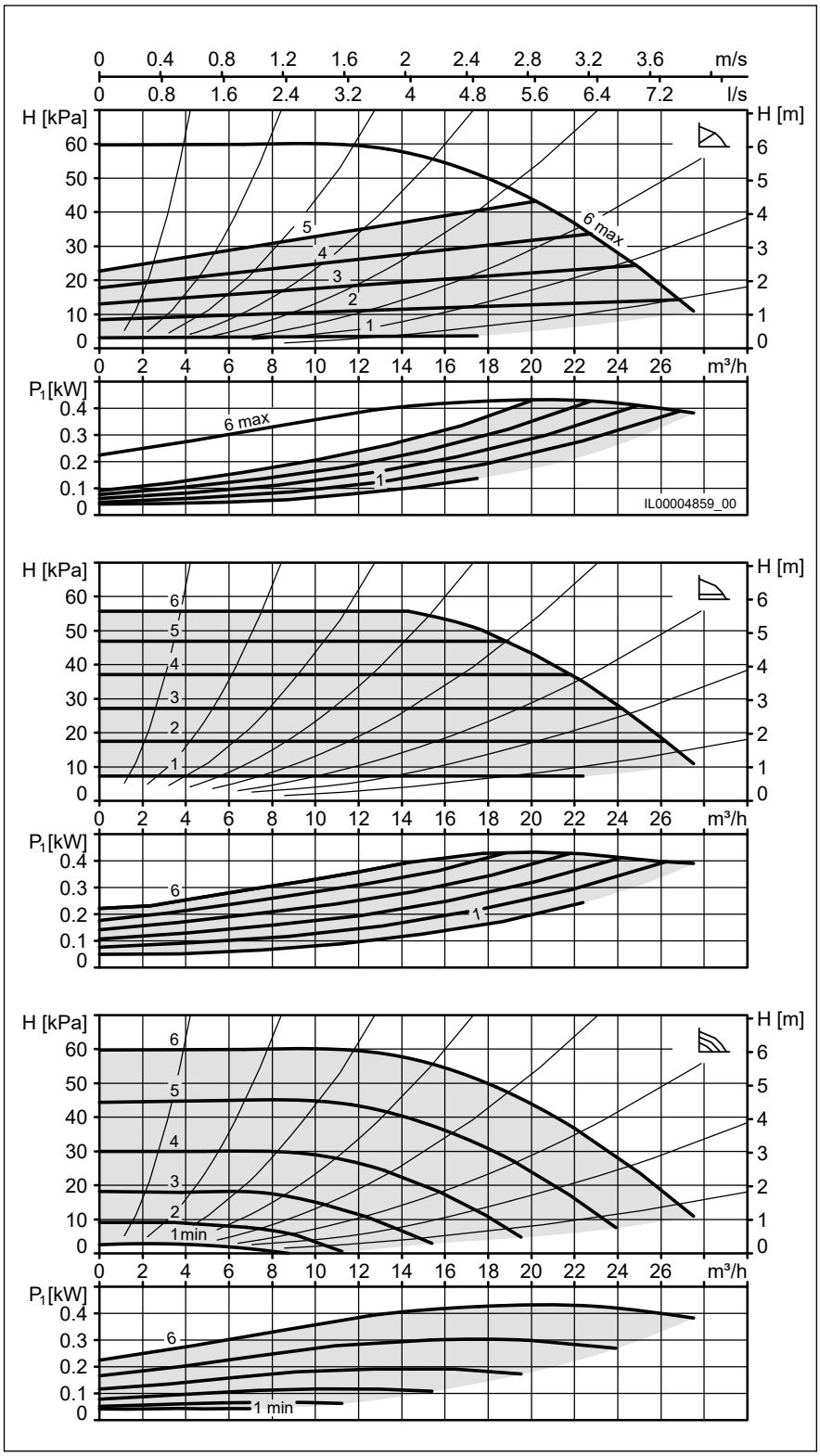

## VivarA S 50-8 270

| | |
|---|---|
| Minimum efficiency index (MEI) | ≥ 0.7 |
| Nominal width | DN 50 |
| Max. flow head H | 8 m |
| Overall length | 270 mm |
| Max. operating pressure | 16 bar |
| Media temperature | -20 °C…+140 °C |
| Ambient temperature | -20 °C…+40 °C |
| Net weight | 25 kg |

**Electrical data**

| | |
|---|---|
| Voltage | 3x400 V |
| Frequency | 50 Hz |
| Input power $P_1$ | 0.61 kW |
| Output power $P_2$ | 0.37 kW |
| Nominal current | 1.19 A |
| Speed | 4000 1/min |
| Motor protection | integrated |
| Protection rating | IP55 |
| Insulation class | F (155°C) |
| Motor efficiency class | IE5 |

**Required operating pressure at 500m a.s.l.**

| | |
|---|---|
| at a water temp. of 75 °C | 0.7 bar |
| at a water temp. of 95 °C | 1.2 bar |
| at a water temp. of 110 °C | 1.7 bar |
| for every ±100 m of altitude | 0.1 bar |

**Connction diagram**

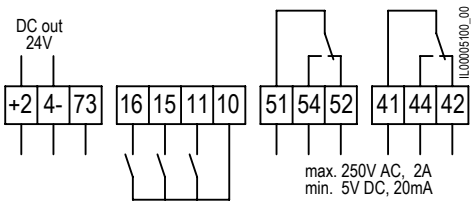


| | |
|---|---|
| **+24-** | 24 V DC out |
| **73** | Actual value input |
| **11,10** | External OFF or external ON (reversible) |
| **10,15** | Digital input minimum speed |
| **10,16** | Digital input maximum speed |
| **52, 54, 51** | Fault message or operating message |
| **42, 44, 41** | Operating or ready message |
| **L, N, PE** | Mains connection |

**Switch**

**1** Fault/operating message
**2** Operating/ready message
**3** External OFF or external ON

**Included in the scope of delivery**

– Sealing kit
– Screw kit

**Accessories**

– Biral Interface Modules
– Weld neck flange, pair PN10/16, DN50
– Intermediate piece DN50, 170mm, PN16
– Sealing kits for flanges DN50, PN6 or PN16
– Base plate 235x235 KTL

| | **Art. no.** |
|---|---|
| VivarA S 50-8 270 | 7000000604 |

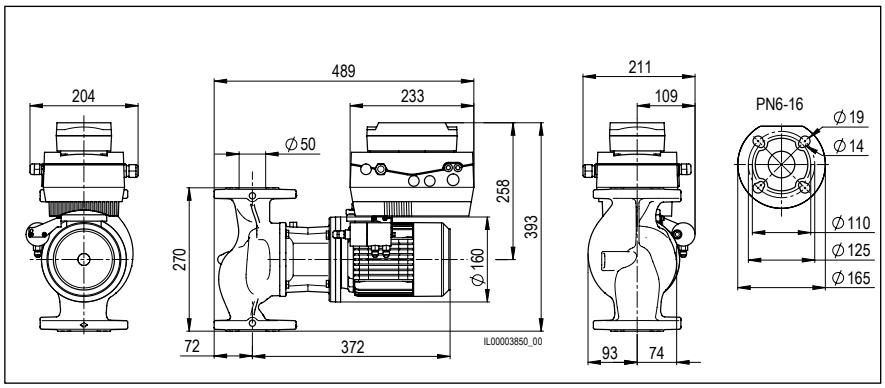


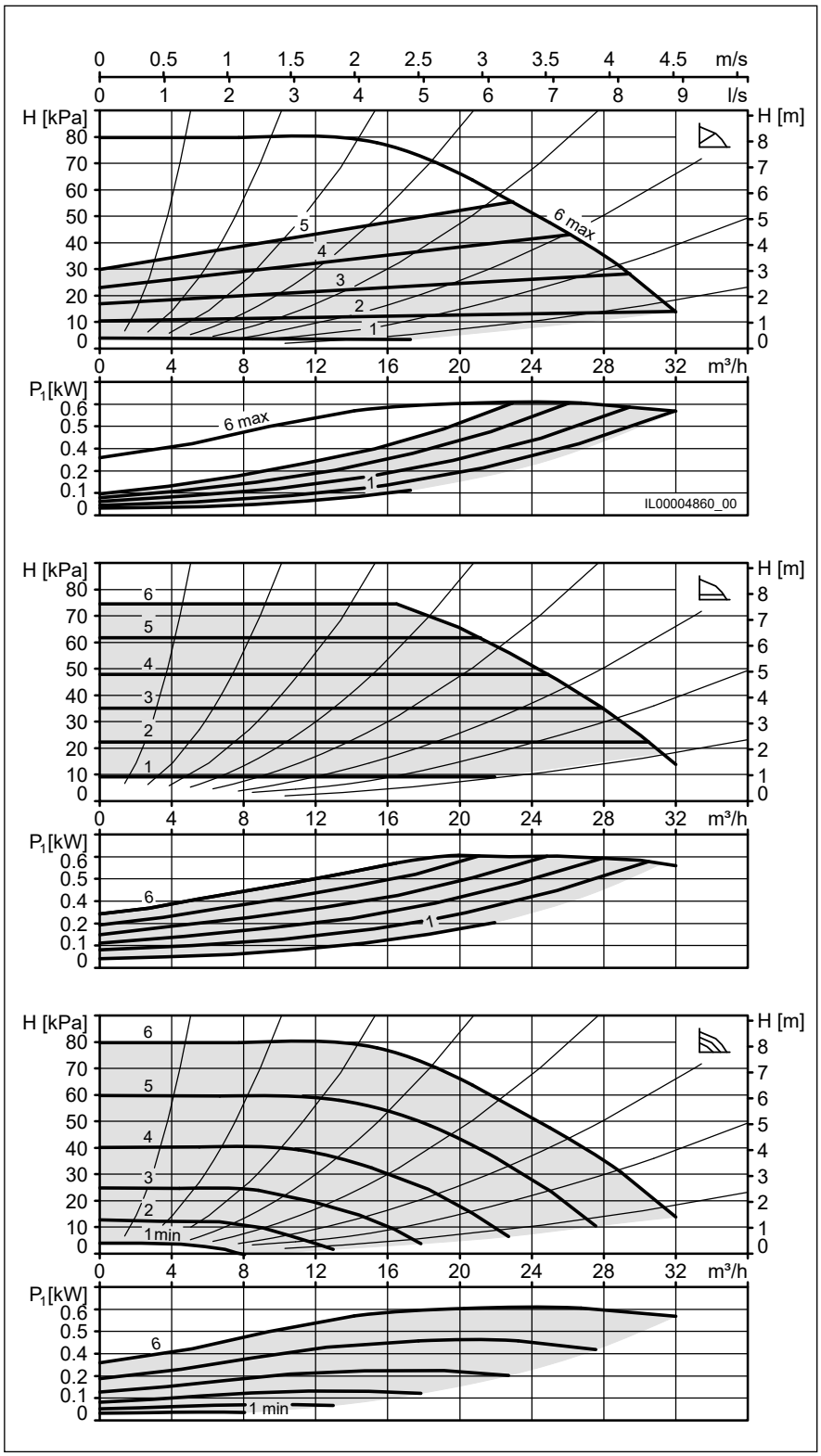




Datasheets

## VivarA S 50-12 270

| | |
|---|---|
| Minimum efficiency index (MEI) | ≥ 0.7 |
| Nominal width | DN 50 |
| Max. flow head H | 12 m |
| Overall length | 270 mm |
| Max. operating pressure | 16 bar |
| Media temperature | -20 °C…+140 °C |
| Ambient temperature | -20 °C…+40 °C |
| Net weight | 25 kg |

**Electrical data**

| | |
|---|---|
| Voltage | 3x400 V |
| Frequency | 50 Hz |
| Input power $P_1$ | 0.82 kW |
| Output power $P_2$ | 0.55 kW |
| Nominal current | 1.5 A |
| Speed | 4000 1/min |
| Motor protection | integrated |
| Protection rating | IP55 |
| Insulation class | F (155°C) |
| Motor efficiency class | IE5 |

**Required operating pressure at 500m a.s.l.**

| | |
|---|---|
| at a water temp. of 75 °C | 0.7 bar |
| at a water temp. of 95 °C | 1.2 bar |
| at a water temp. of 110 °C | 1.7 bar |
| for every ±100 m of altitude | 0.1 bar |

**Connction diagram**

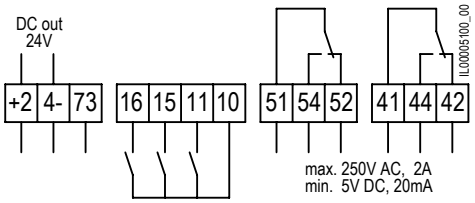


| | |
|---|---|
| **+24-** | 24 V DC out |
| **73** | Actual value input |
| **11,10** | External OFF or external ON (reversible) |
| **10,15** | Digital input minimum speed |
| **10,16** | Digital input maximum speed |
| **52, 54, 51** | Fault message or operating message |
| **42, 44, 41** | Operating or ready message |
| **L, N, PE** | Mains connection |

**Switch**

**1** Fault/operating message
**2** Operating/ready message
**3** External OFF or external ON

**Included in the scope of delivery**

– Sealing kit
– Screw kit

**Accessories**

– Biral Interface Modules
– Weld neck flange, pair PN10/16, DN50
– Intermediate piece DN50, 170mm, PN16
– Sealing kits for flanges DN50, PN6 or PN16
– Base plate 235x235 KTL

| | **Art. no.** |
|---|---|
| VivarA S 50-12 270 | 7000000605 |

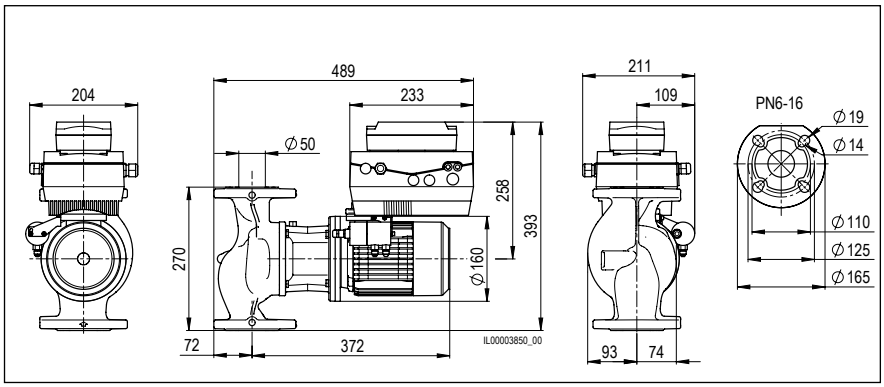


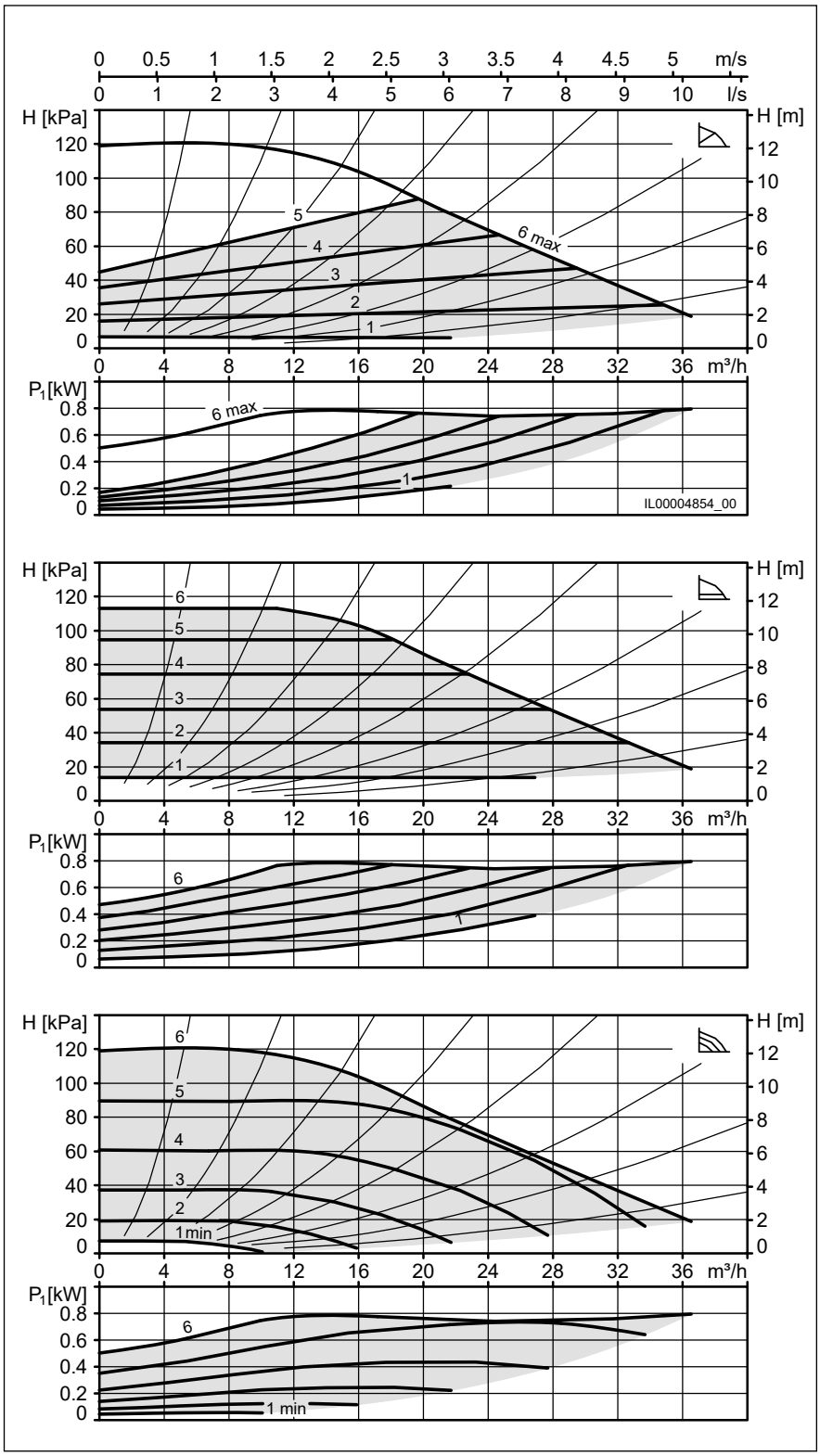

## VivarA S 50-15 270

| | |
|---|---|
| Minimum efficiency index (MEI) | ≥ 0.7 |
| Nominal width | DN 50 |
| Max. flow head H | 15 m |
| Overall length | 270 mm |
| Max. operating pressure | 16 bar |
| Media temperature | -20 °C…+140 °C |
| Ambient temperature | -20 °C…+40 °C |
| Net weight | 25 kg |

**Electrical data**

| | |
|---|---|
| Voltage | 3x400 V |
| Frequency | 50 Hz |
| Input power $P_1$ | 1.05 kW |
| Output power $P_2$ | 0.75 kW |
| Nominal current | 1.84 A |
| Speed | 4000 1/min |
| Motor protection | integrated |
| Protection rating | IP55 |
| Insulation class | F (155°C) |
| Motor efficiency class | IE5 |

**Required operating pressure at 500m a.s.l.**

| | |
|---|---|
| at a water temp. of 75 °C | 0.7 bar |
| at a water temp. of 95 °C | 1.2 bar |
| at a water temp. of 110 °C | 1.7 bar |
| for every ±100 m of altitude | 0.1 bar |

**Connction diagram**

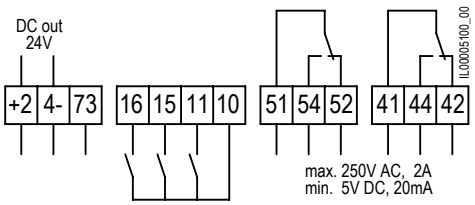


| | |
|---|---|
| **+24-** | 24 V DC out |
| **73** | Actual value input |
| **11,10** | External OFF or external ON (reversible) |
| **10,15** | Digital input minimum speed |
| **10,16** | Digital input maximum speed |
| **52, 54, 51** | Fault message or operating message |
| **42, 44, 41** | Operating or ready message |
| **L, N, PE** | Mains connection |

**Switch**

**1** Fault/operating message
**2** Operating/ready message
**3** External OFF or external ON

**Included in the scope of delivery**

– Sealing kit
– Screw kit

**Accessories**

– Biral Interface Modules
– Weld neck flange, pair PN10/16, DN50
– Intermediate piece DN50, 170mm, PN16
– Sealing kits for flanges DN50, PN6 or PN16
– Base plate 235x235 KTL

| | **Art. no.** |
|---|---|
| VivarA S 50-15 270 | 7000000606 |

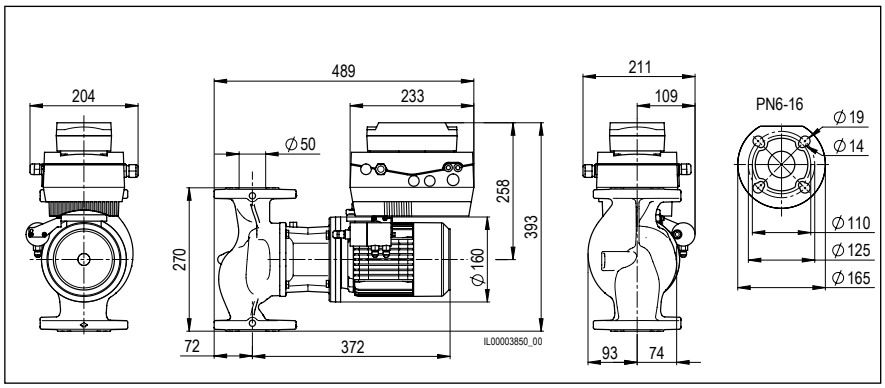


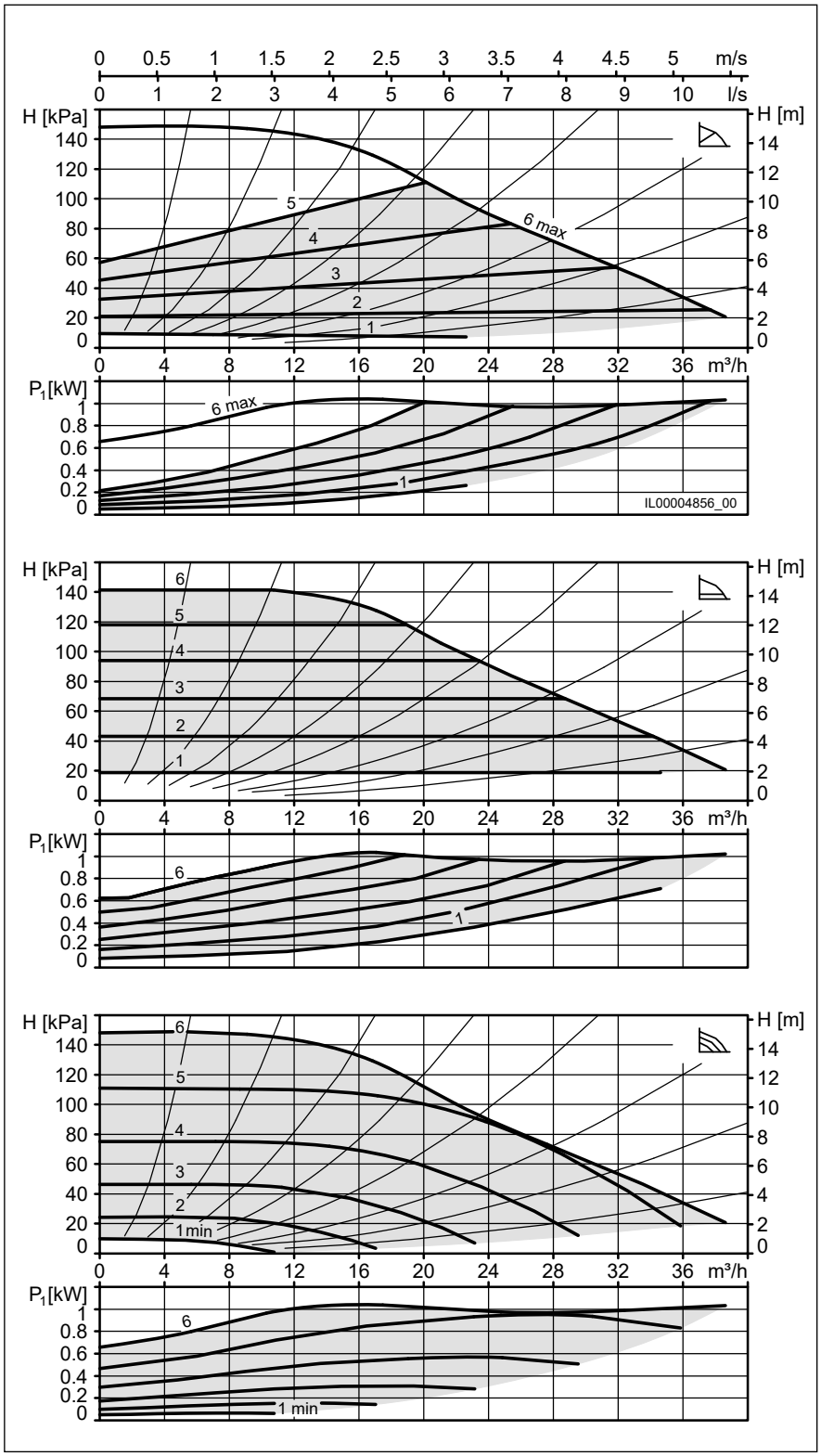




Datasheets

## VivarA S 50-18 270

| | |
|---|---|
| Minimum efficiency index (MEI) | ≥ 0.7 |
| Nominal width | DN 50 |
| Max. flow head H | 18 m |
| Overall length | 270 mm |
| Max. operating pressure | 16 bar |
| Media temperature | -20 °C…+140 °C |
| Ambient temperature | -20 °C…+40 °C |
| Net weight | 26 kg |

**Electrical data**

| | |
|---|---|
| Voltage | 3x400 V |
| Frequency | 50 Hz |
| Input power $P_1$ | 1.68 kW |
| Output power $P_2$ | 1.1 kW |
| Nominal current | 2.73 A |
| Speed | 5900 1/min |
| Motor protection | integrated |
| Protection rating | IP55 |
| Insulation class | F (155°C) |
| Motor efficiency class | IE5 |

**Required operating pressure at 500m a.s.l.**

| | |
|---|---|
| at a water temp. of 75 °C | 0.7 bar |
| at a water temp. of 95 °C | 1.2 bar |
| at a water temp. of 110 °C | 1.7 bar |
| for every ±100 m of altitude | 0.1 bar |

**Connction diagram**

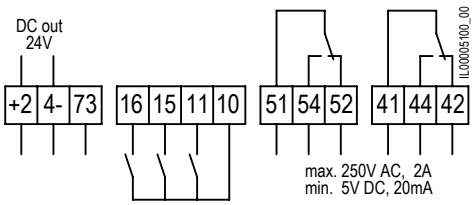


| | |
|---|---|
| **+24-** | 24 V DC out |
| **73** | Actual value input |
| **11,10** | External OFF or external ON (reversible) |
| **10,15** | Digital input minimum speed |
| **10,16** | Digital input maximum speed |
| **52, 54, 51** | Fault message or operating message |
| **42, 44, 41** | Operating or ready message |
| **L, N, PE** | Mains connection |

**Switch**

**1** Fault/operating message
**2** Operating/ready message
**3** External OFF or external ON

**Included in the scope of delivery**

– Sealing kit
– Screw kit

**Accessories**

– Biral Interface Modules
– Weld neck flange, pair PN10/16, DN50
– Intermediate piece DN50, 170mm, PN16
– Sealing kits for flanges DN50, PN6 or PN16
– Base plate 235x235 KTL

| | **Art. no.** |
|---|---|
| VivarA S 50-18 270 | 7000000607 |

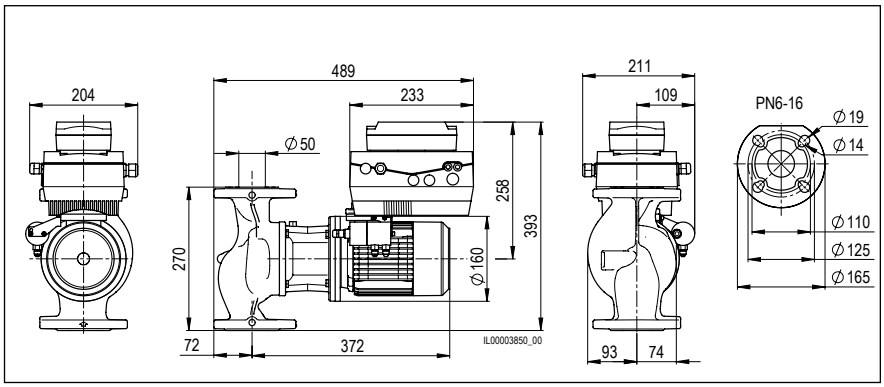


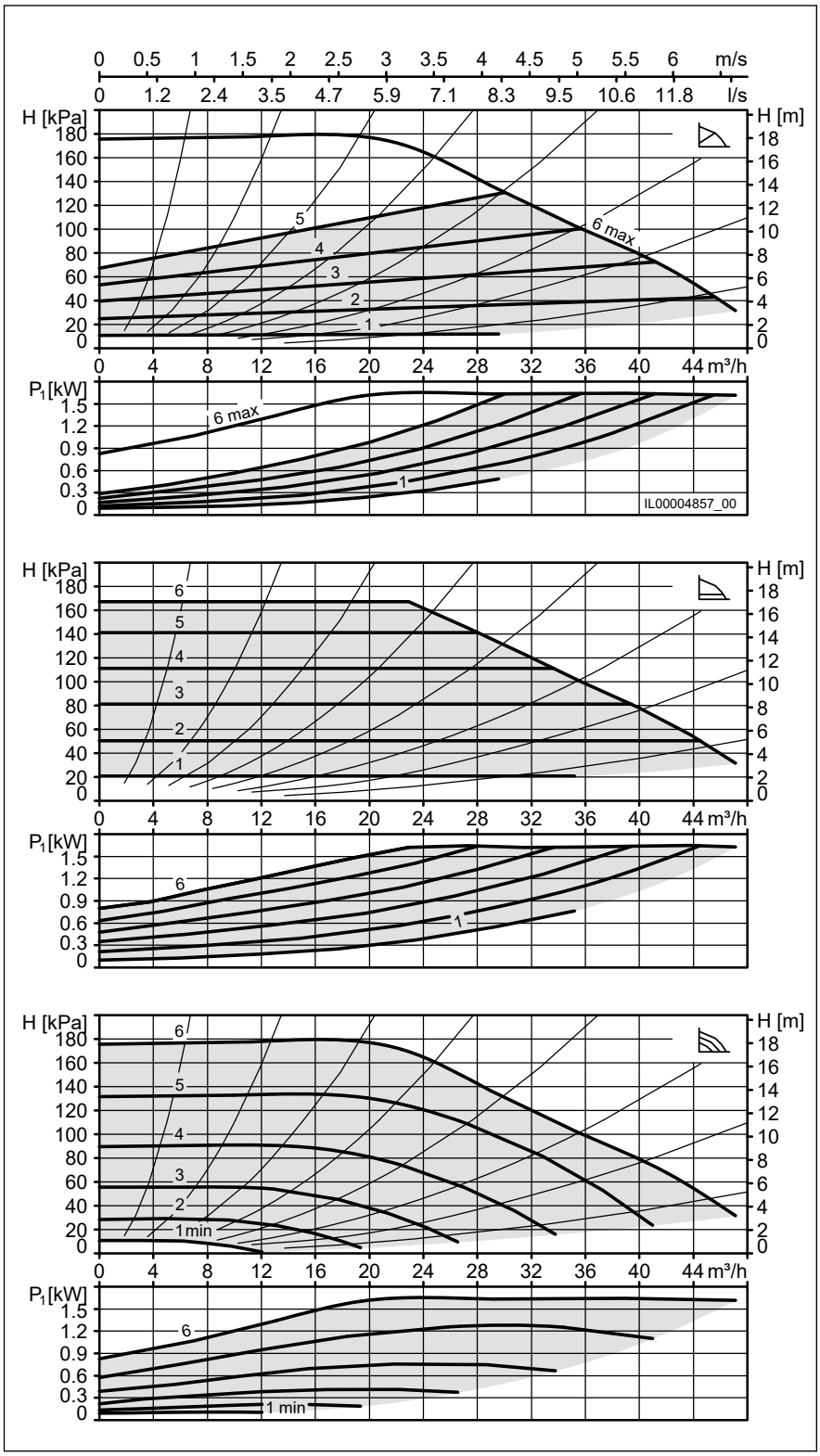

## VivarA S 50-20 270

| | |
|---|---|
| Minimum efficiency index (MEI) | ≥ 0.7 |
| Nominal width | DN 50 |
| Max. flow head H | 20 m |
| Overall length | 270 mm |
| Max. operating pressure | 16 bar |
| Media temperature | -20 °C…+140 °C |
| Ambient temperature | -20 °C…+40 °C |
| Net weight | 27 kg |

**Electrical data**

| | |
|---|---|
| Voltage | 3x400 V |
| Frequency | 50 Hz |
| Input power $P_1$ | 2.15 kW |
| Output power $P_2$ | 1.5 kW |
| Nominal current | 3.57 A |
| Speed | 5900 1/min |
| Motor protection | integrated |
| Protection rating | IP55 |
| Insulation class | F (155°C) |
| Motor efficiency class | IE5 |

**Required operating pressure at 500m a.s.l.**

| | |
|---|---|
| at a water temp. of 75 °C | 0.7 bar |
| at a water temp. of 95 °C | 1.2 bar |
| at a water temp. of 110 °C | 1.7 bar |
| for every ±100 m of altitude | 0.1 bar |

**Connction diagram**

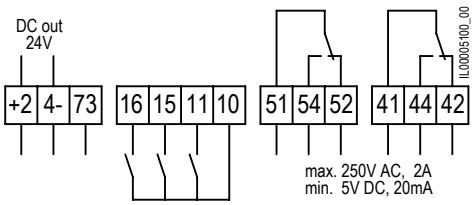


| | |
|---|---|
| **+24-** | 24 V DC out |
| **73** | Actual value input |
| **11,10** | External OFF or external ON (reversible) |
| **10,15** | Digital input minimum speed |
| **10,16** | Digital input maximum speed |
| **52, 54, 51** | Fault message or operating message |
| **42, 44, 41** | Operating or ready message |
| **L, N, PE** | Mains connection |

**Switch**

**1** Fault/operating message
**2** Operating/ready message
**3** External OFF or external ON

**Included in the scope of delivery**

– Sealing kit
– Screw kit

**Accessories**

– Biral Interface Modules
– Weld neck flange, pair PN10/16, DN50
– Intermediate piece DN50, 170mm, PN16
– Sealing kits for flanges DN50, PN6 or PN16
– Base plate 235x235 KTL

| | **Art. no.** |
|---|---|
| VivarA S 50-20 270 | 7000000608 |

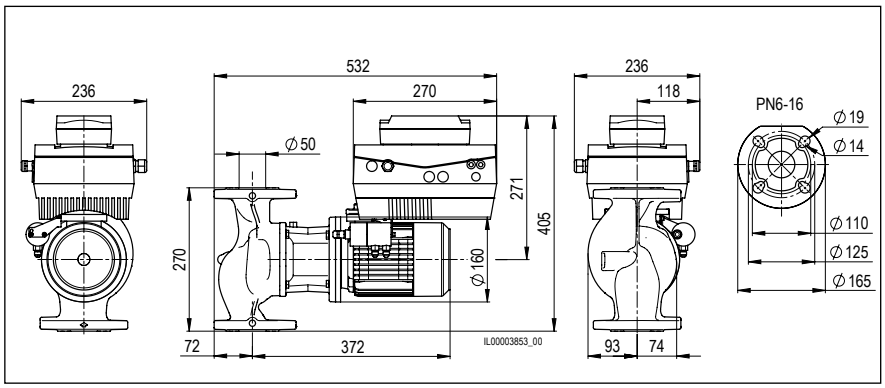


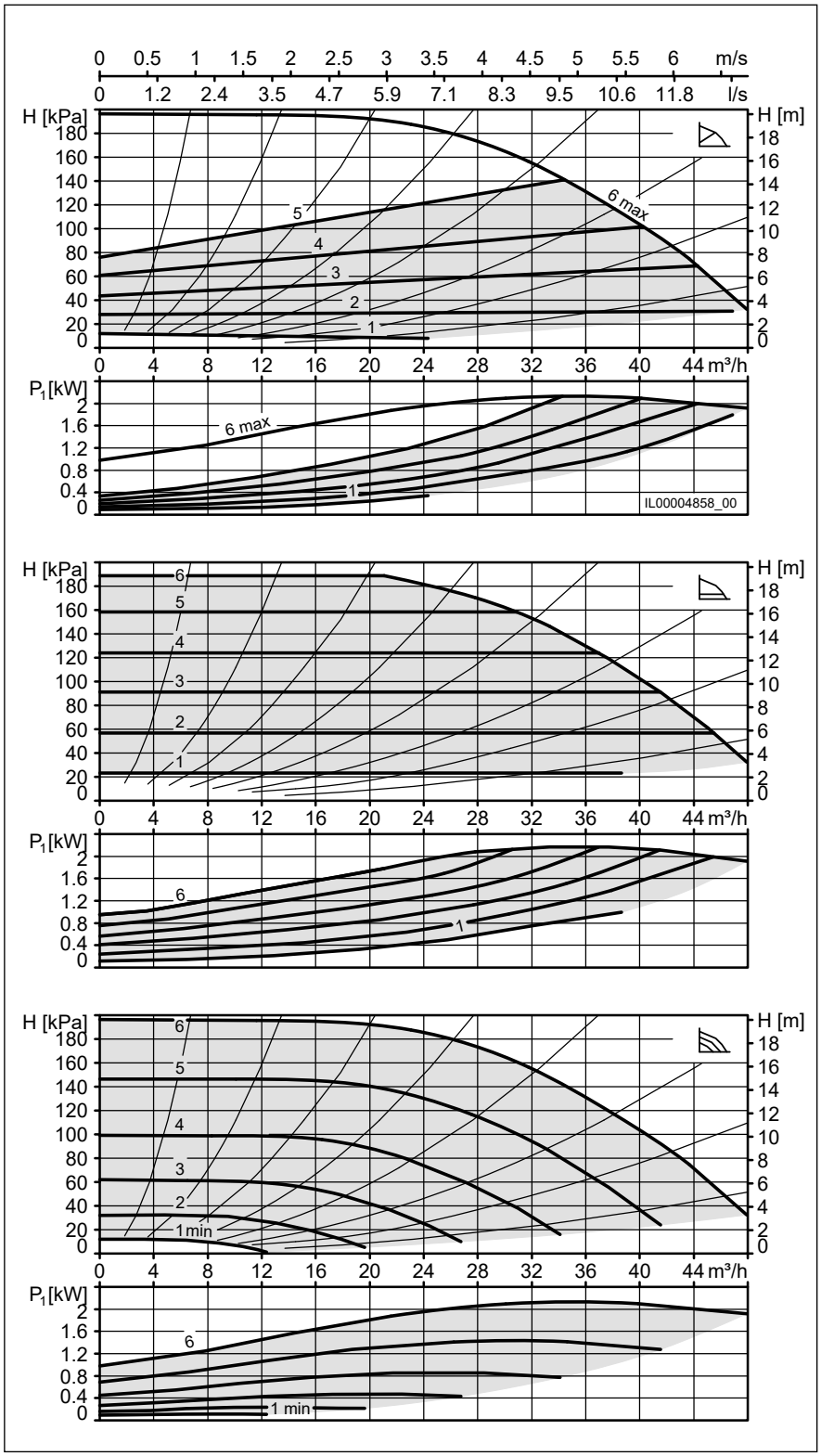




Datasheets

## VivarA S 50-24 270

| | |
|---|---|
| Minimum efficiency index (MEI) | ≥ 0.7 |
| Nominal width | DN 50 |
| Max. flow head H | 24 m |
| Overall length | 270 mm |
| Max. operating pressure | 16 bar |
| Media temperature | -20 °C…+140 °C |
| Ambient temperature | -20 °C…+40 °C |
| Net weight | 28 kg |

**Electrical data**

| | |
|---|---|
| Voltage | 3x400 V |
| Frequency | 50 Hz |
| Input power $P_1$ | 2.74 kW |
| Output power $P_2$ | 2.2 kW |
| Nominal current | 4.44 A |
| Speed | 5900 1/min |
| Motor protection | integrated |
| Protection rating | IP55 |
| Insulation class | F (155°C) |
| Motor efficiency class | IE5 |

**Required operating pressure at 500m a.s.l.**

| | |
|---|---|
| at a water temp. of 75 °C | 0.7 bar |
| at a water temp. of 95 °C | 1.2 bar |
| at a water temp. of 110 °C | 1.7 bar |
| for every ±100 m of altitude | 0.1 bar |

**Connction diagram**

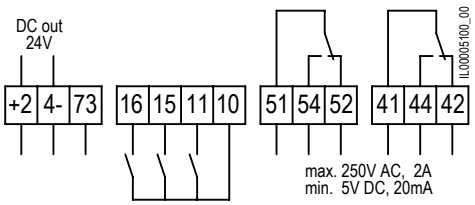


| | |
|---|---|
| **+24-** | 24 V DC out |
| **73** | Actual value input |
| **11,10** | External OFF or external ON (reversible) |
| **10,15** | Digital input minimum speed |
| **10,16** | Digital input maximum speed |
| **52, 54, 51** | Fault message or operating message |
| **42, 44, 41** | Operating or ready message |
| **L, N, PE** | Mains connection |

**Switch**

**1** Fault/operating message
**2** Operating/ready message
**3** External OFF or external ON

**Included in the scope of delivery**

– Sealing kit
– Screw kit

**Accessories**

– Biral Interface Modules
– Weld neck flange, pair PN10/16, DN50
– Intermediate piece DN50, 170mm, PN16
– Sealing kits for flanges DN50, PN6 or PN16
– Base plate 235x235 KTL

| | **Art. no.** |
|---|---|
| VivarA S 50-24 270 | 7000000609 |

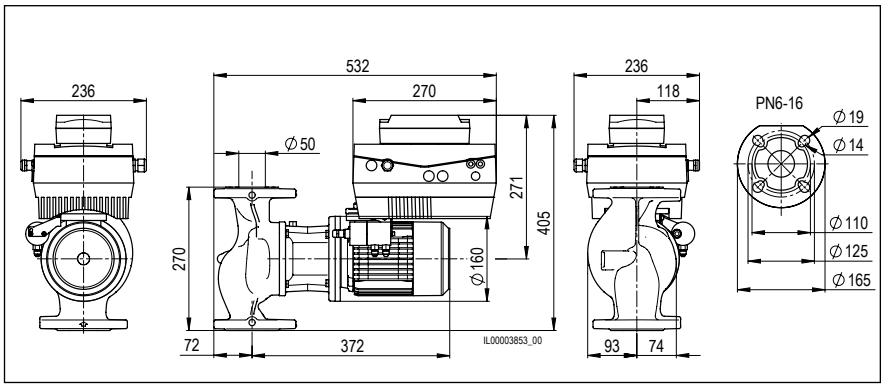


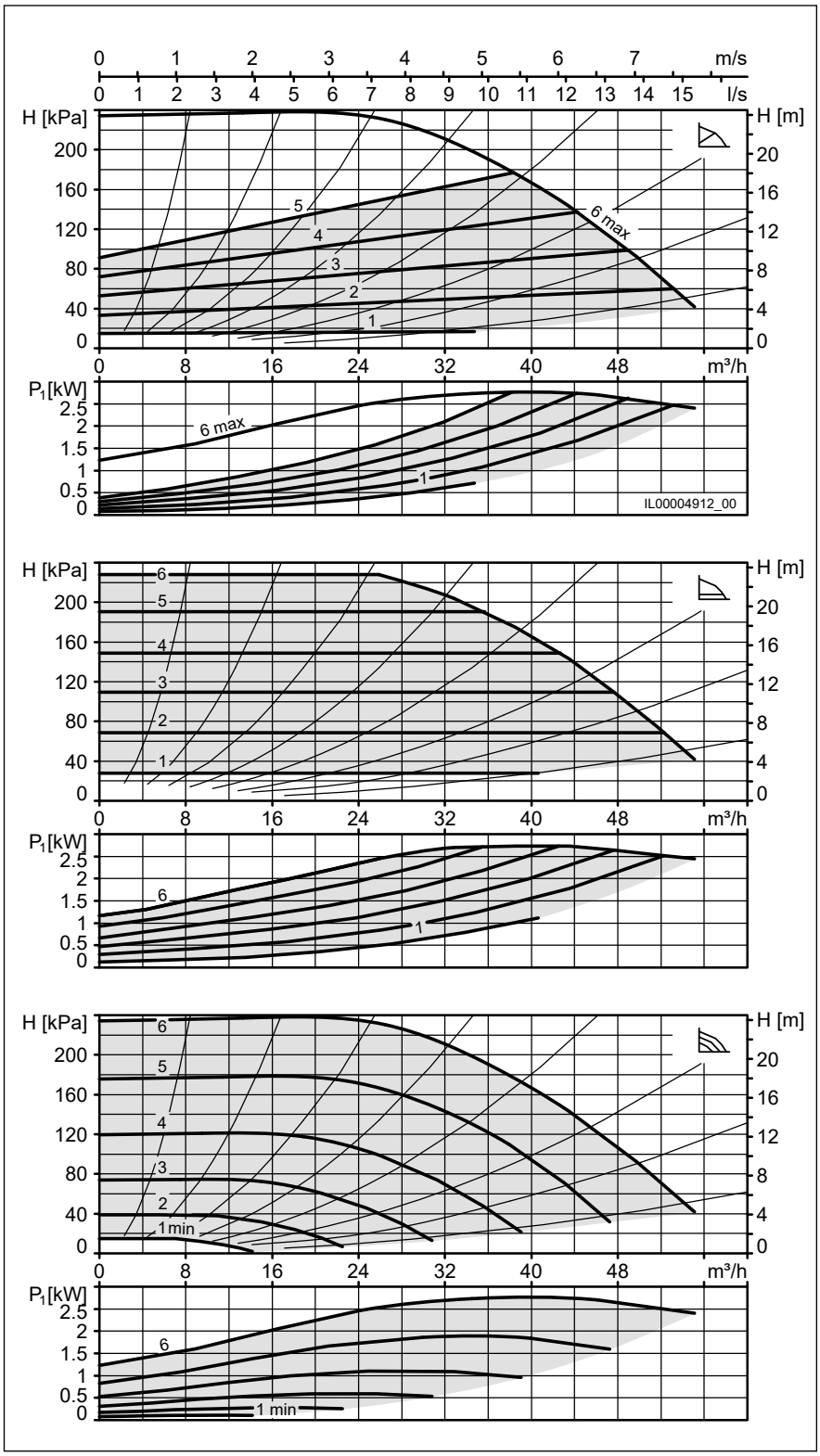

## VivarA M 50-29 340

| | |
|---|---|
| Minimum efficiency index (MEI) | ≥ 0.7 |
| Nominal width | DN 50 |
| Max. flow head H | 29 m |
| Overall length | 340 mm |
| Max. operating pressure | 16 bar |
| Media temperature | -20 °C…+140 °C |
| Ambient temperature | -20 °C…+40 °C |
| Net weight | 49 kg |

### Electrical data

| | |
|---|---|
| Voltage | 3x400 V |
| Frequency | 50 Hz |
| Input power $P_1$ | 3.35 kW |
| Output power $P_2$ | 3 kW |
| Nominal current | 5.3 A |
| Speed | 3000 1/min |
| Motor protection | integrated |
| Protection rating | IP55 |
| Insulation class | F (155°C) |
| Motor efficiency class | IE5 |

### Required operating pressure at 500m a.s.l.

| | |
|---|---|
| at a water temp. of 75 °C | 0.7 bar |
| at a water temp. of 95 °C | 1.2 bar |
| at a water temp. of 110 °C | 1.7 bar |
| for every ±100 m of altitude | 0.1 bar |

### Connction diagram

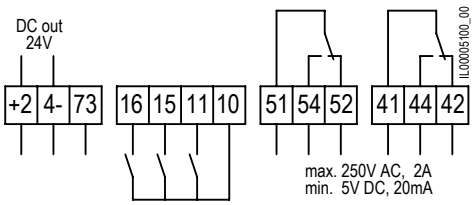


| | |
|---|---|
| **+24-** | 24 V DC out |
| **73** | Actual value input |
| **11,10** | External OFF or external ON (reversible) |
| **10,15** | Digital input minimum speed |
| **10,16** | Digital input maximum speed |
| **52, 54, 51** | Fault message or operating message |
| **42, 44, 41** | Operating or ready message |
| **L, N, PE** | Mains connection |

### Switch

**1** Fault/operating message
**2** Operating/ready message
**3** External OFF or external ON

### Included in the scope of delivery

– Sealing kit
– Screw kit

### Accessories

– Biral Interface Modules
– Weld neck flange, pair PN10/16, DN50
– Intermediate piece DN50, 170mm, PN16
– Sealing kits for flanges DN50, PN6 or PN16
– Base plate 235x235 KTL

| | **Art. no.** |
|---|---|
| VivarA M 50-29 340 | 7000000637 |

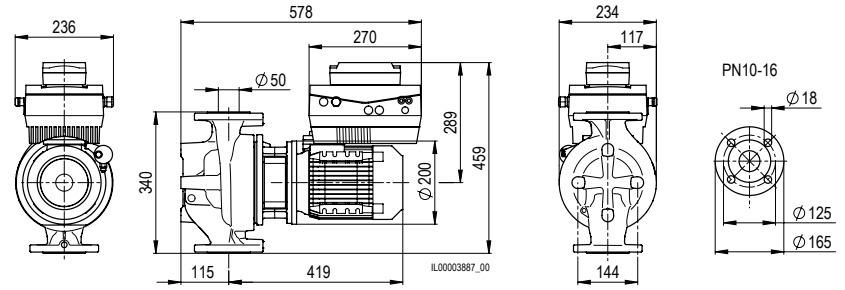


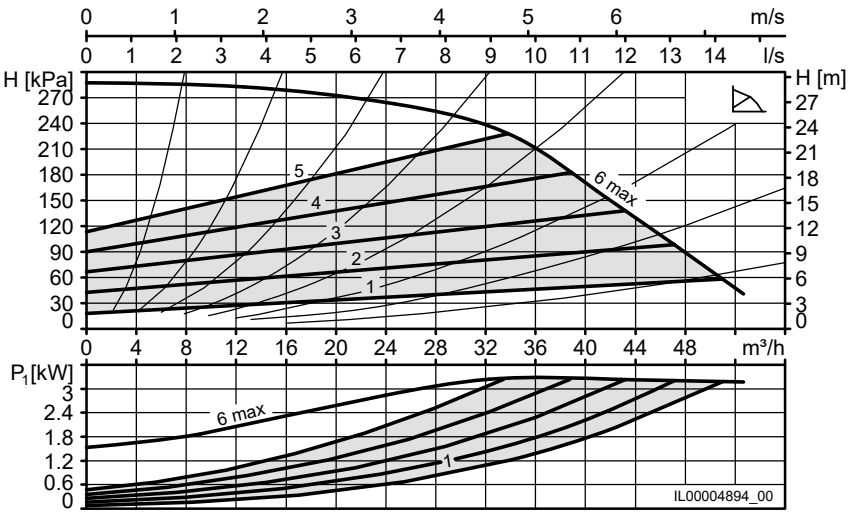


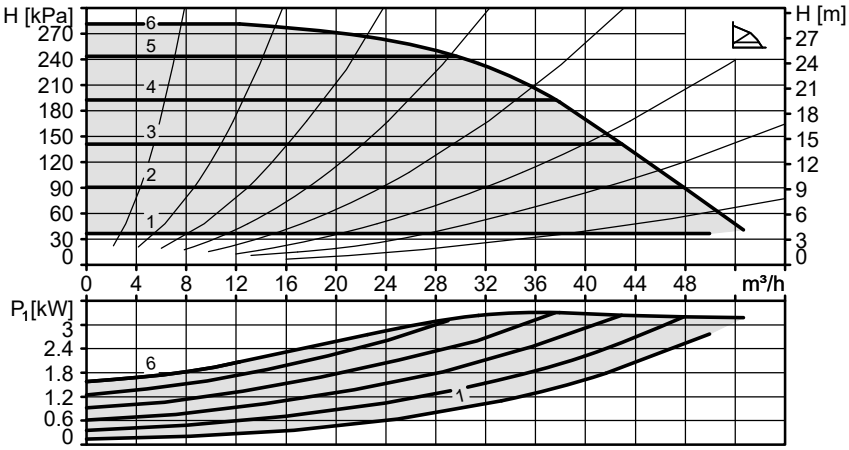


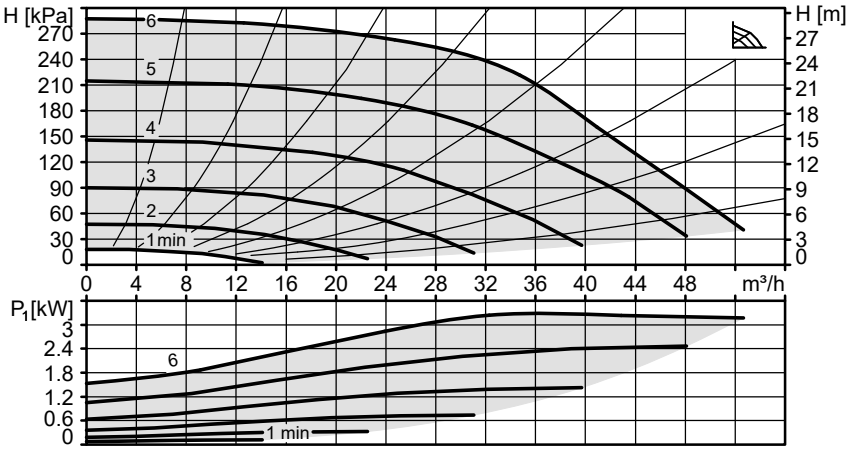


Datasheets

## VivarA M 50-36 340

| | |
|---|---|
| Minimum efficiency index (MEI) | ≥ 0.7 |
| Nominal width | DN 50 |
| Max. flow head H | 36 m |
| Overall length | 340 mm |
| Max. operating pressure | 16 bar |
| Media temperature | -20 °C…+140 °C |
| Ambient temperature | -20 °C…+40 °C |
| Net weight | 52 kg |

**Electrical data**

| | |
|---|---|
| Voltage | 3x400 V |
| Frequency | 50 Hz |
| Input power $P_1$ | 4.49 kW |
| Output power $P_2$ | 4 kW |
| Nominal current | 7.02 A |
| Speed | 3000 1/min |
| Motor protection | integrated |
| Protection rating | IP55 |
| Insulation class | F (155°C) |
| Motor efficiency class | IE5 |

**Required operating pressure at 500m a.s.l.**

| | |
|---|---|
| at a water temp. of 75 °C | 0.7 bar |
| at a water temp. of 95 °C | 1.2 bar |
| at a water temp. of 110 °C | 1.7 bar |
| for every ±100 m of altitude | 0.1 bar |

**Connction diagram**

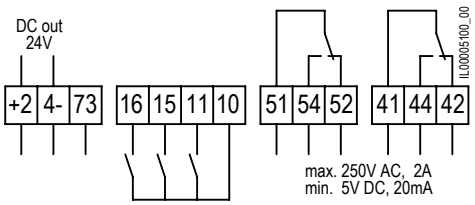


| | |
|---|---|
| **+24-** | 24 V DC out |
| **73** | Actual value input |
| **11,10** | External OFF or external ON (reversible) |
| **10,15** | Digital input minimum speed |
| **10,16** | Digital input maximum speed |
| **52, 54, 51** | Fault message or operating message |
| **42, 44, 41** | Operating or ready message |
| **L, N, PE** | Mains connection |

**Switch**

**1** Fault/operating message
**2** Operating/ready message
**3** External OFF or external ON

**Included in the scope of delivery**

– Sealing kit
– Screw kit

**Accessories**

– Biral Interface Modules
– Weld neck flange, pair PN10/16, DN50
– Intermediate piece DN50, 170mm, PN16
– Sealing kits for flanges DN50, PN6 or PN16
– Base plate 235x235 KTL

| | **Art. no.** |
|---|---|
| VivarA M 50-36 340 | 7000000638 |

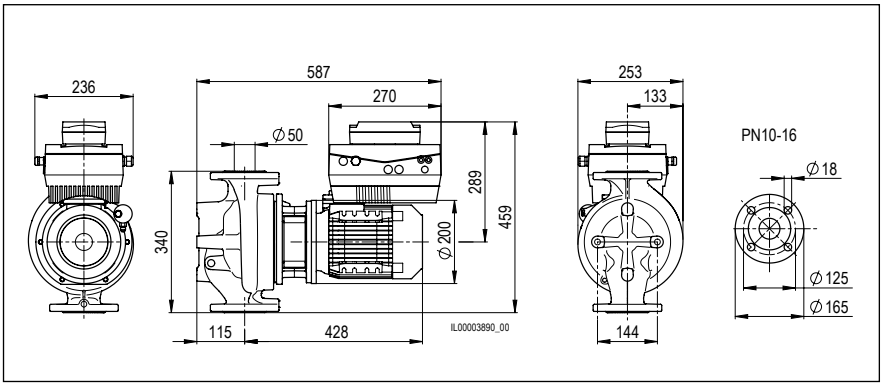


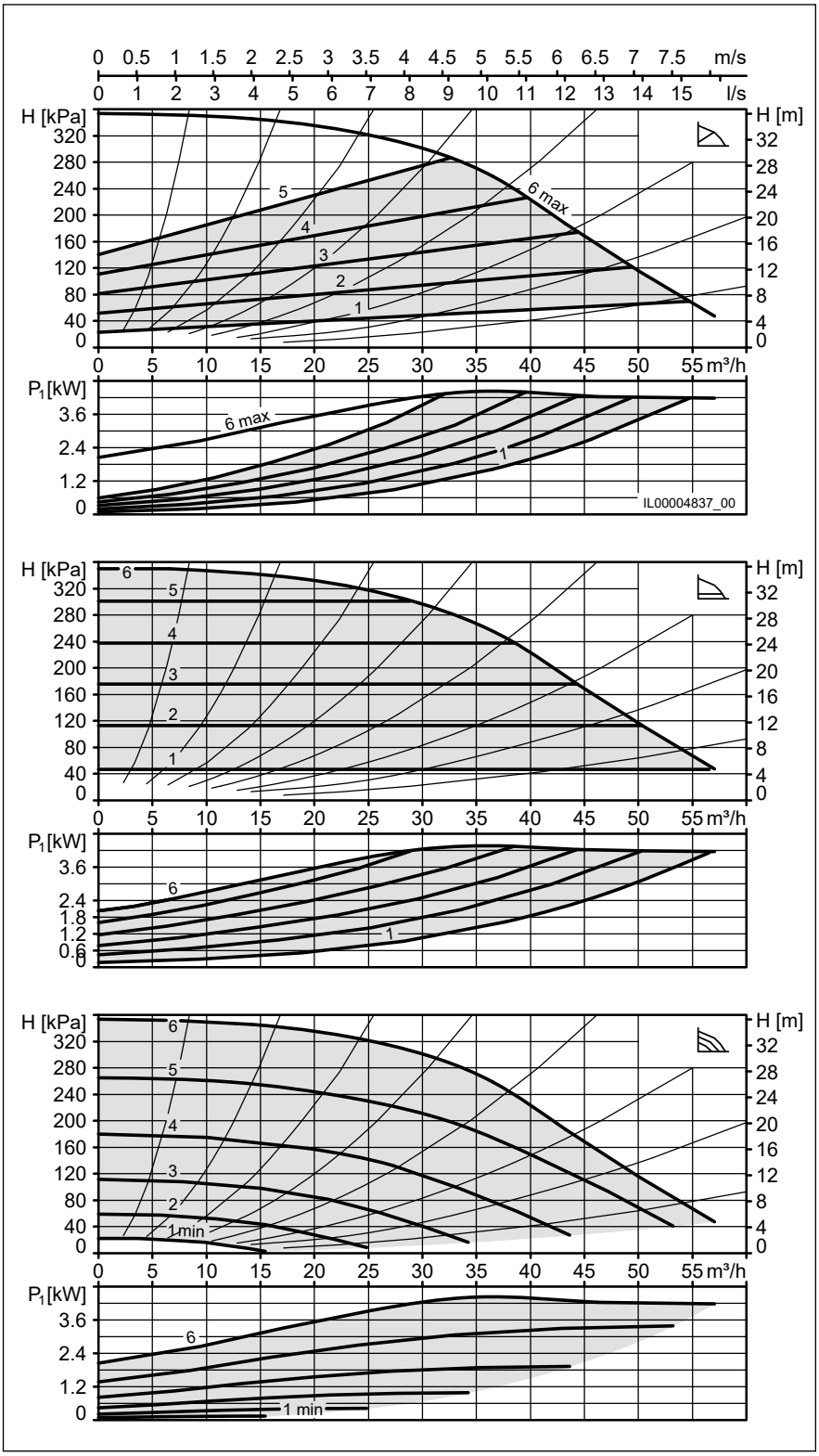

## VivarA M 50-43 340

| | |
|---|---|
| Minimum efficiency index (MEI) | ≥ 0.7 |
| Nominal width | DN 50 |
| Max. flow head H | 43 m |
| Overall length | 340 mm |
| Max. operating pressure | 16 bar |
| Media temperature | -20 °C…+140 °C |
| Ambient temperature | -20 °C…+40 °C |
| Net weight | 58 kg |

**Electrical data**

| | |
|---|---|
| Voltage | 3x400 V |
| Frequency | 50 Hz |
| Input power $P_1$ | 6.17 kW |
| Output power $P_2$ | 5.5 kW |
| Nominal current | 9.9 A |
| Speed | 3000 1/min |
| Motor protection | integrated |
| Protection rating | IP55 |
| Insulation class | F (155°C) |
| Motor efficiency class | IE5 |

**Required operating pressure at 500m a.s.l.**

| | |
|---|---|
| at a water temp. of 75 °C | 0.7 bar |
| at a water temp. of 95 °C | 1.2 bar |
| at a water temp. of 110 °C | 1.7 bar |
| for every ±100 m of altitude | 0.1 bar |

**Connction diagram**

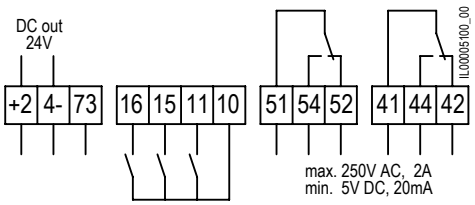


| | |
|---|---|
| **+24-** | 24 V DC out |
| **73** | Actual value input |
| **11,10** | External OFF or external ON (reversible) |
| **10,15** | Digital input minimum speed |
| **10,16** | Digital input maximum speed |
| **52, 54, 51** | Fault message or operating message |
| **42, 44, 41** | Operating or ready message |
| **L, N, PE** | Mains connection |

**Switch**

**1** Fault/operating message
**2** Operating/ready message
**3** External OFF or external ON

**Included in the scope of delivery**

– Sealing kit
– Screw kit

**Accessories**

– Biral Interface Modules
– Weld neck flange, pair PN10/16, DN50
– Intermediate piece DN50, 170mm, PN16
– Sealing kits for flanges DN50, PN6 or PN16
– Base plate 235x235 KTL

| | **Art. no.** |
|---|---|
| VivarA M 50-43 340 | 7000000639 |

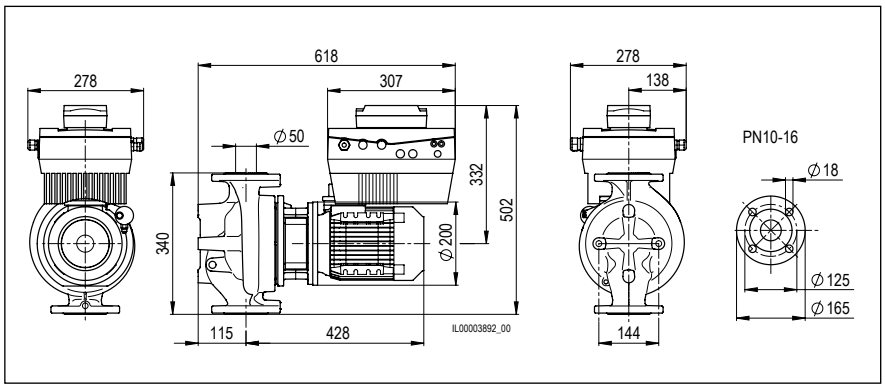


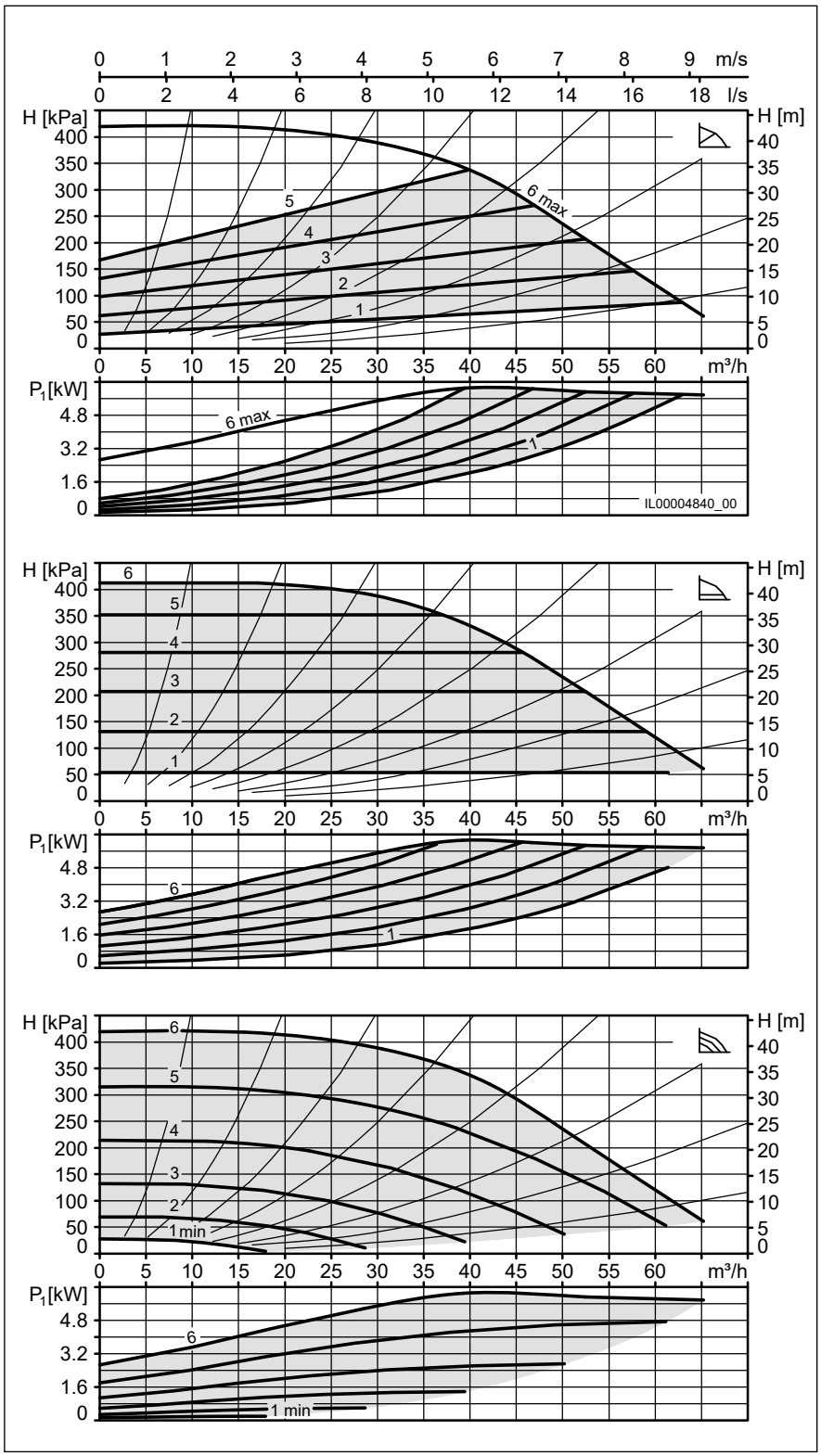

## VivarA S 65-6 340

| | |
|---|---|
| Minimum efficiency index (MEI) | ≥ 0.7 |
| Nominal width | DN 65 |
| Max. flow head H | 6 m |
| Overall length | 340 mm |
| Max. operating pressure | 16 bar |
| Media temperature | -20 °C…+140 °C |
| Ambient temperature | -20 °C…+40 °C |
| Net weight | 27 kg |

### Electrical data

| | |
|---|---|
| Voltage | 3x400 V |
| Frequency | 50 Hz |
| Input power $P_1$ | 0.47 kW |
| Output power $P_2$ | 0.37 kW |
| Nominal current | 1.04 A |
| Speed | 4000 1/min |
| Motor protection | integrated |
| Protection rating | IP55 |
| Insulation class | F (155°C) |
| Motor efficiency class | IE5 |

### Required operating pressure at 500m a.s.l.

| | |
|---|---|
| at a water temp. of 75 °C | 0.7 bar |
| at a water temp. of 95 °C | 1.2 bar |
| at a water temp. of 110 °C | 1.7 bar |
| for every ±100 m of altitude | 0.1 bar |

### Connction diagram

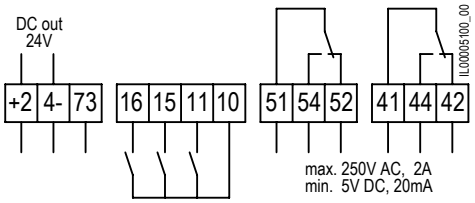


| | |
|---|---|
| **+24-** | 24 V DC out |
| **73** | Actual value input |
| **11,10** | External OFF or external ON (reversible) |
| **10,15** | Digital input minimum speed |
| **10,16** | Digital input maximum speed |
| **52, 54, 51** | Fault message or operating message |
| **42, 44, 41** | Operating or ready message |
| **L, N, PE** | Mains connection |

### Switch

**1** Fault/operating message
**2** Operating/ready message
**3** External OFF or external ON

### Included in the scope of delivery

– Sealing kit
– Screw kit

### Accessories

– Biral Interface Modules
– Weld neck flange, pair PN10/16, DN65
– Intermediate piece DN65, 135mm, PN16
– Sealing kits for flanges DN65, PN6 or PN16
– Base plate 235x235 KTL

| | Art. no. |
|---|---|
| VivarA S 65-6 340 | 7000000610 |

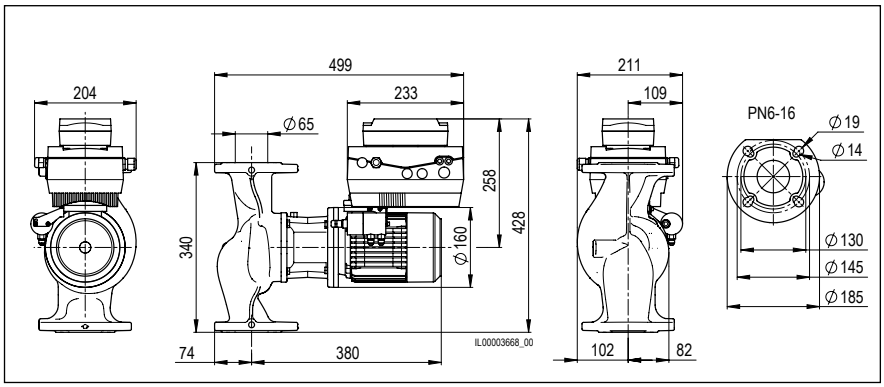


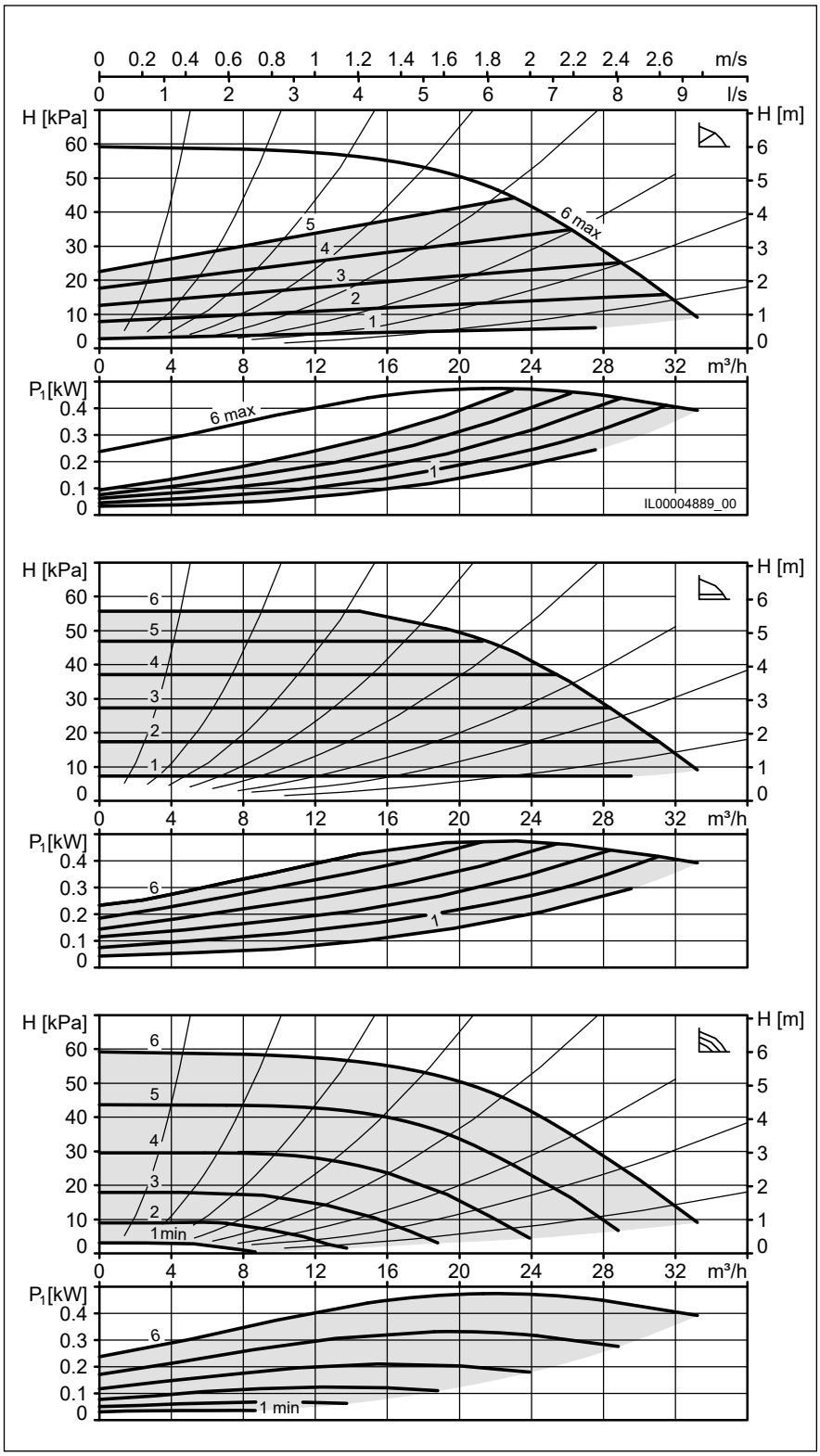

## VivarA S 65-8 340

| | |
|---|---|
| Minimum efficiency index (MEI) | ≥ 0.7 |
| Nominal width | DN 65 |
| Max. flow head H | 8 m |
| Overall length | 340 mm |
| Max. operating pressure | 16 bar |
| Media temperature | -20 °C…+140 °C |
| Ambient temperature | -20 °C…+40 °C |
| Net weight | 27 kg |

**Electrical data**

| | |
|---|---|
| Voltage | 3x400 V |
| Frequency | 50 Hz |
| Input power $P_1$ | 0.67 kW |
| Output power $P_2$ | 0.55 kW |
| Nominal current | 1.34 A |
| Speed | 4000 1/min |
| Motor protection | integrated |
| Protection rating | IP55 |
| Insulation class | F (155°C) |
| Motor efficiency class | IE5 |

**Required operating pressure at 500m a.s.l.**

| | |
|---|---|
| at a water temp. of 75 °C | 0.7 bar |
| at a water temp. of 95 °C | 1.2 bar |
| at a water temp. of 110 °C | 1.7 bar |
| for every ±100 m of altitude | 0.1 bar |

**Connction diagram**

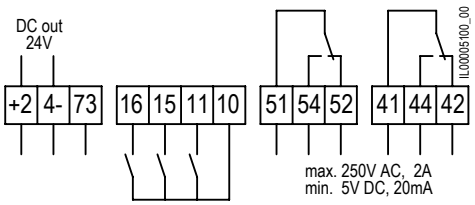


| | |
|---|---|
| **+24-** | 24 V DC out |
| **73** | Actual value input |
| **11,10** | External OFF or external ON (reversible) |
| **10,15** | Digital input minimum speed |
| **10,16** | Digital input maximum speed |
| **52, 54, 51** | Fault message or operating message |
| **42, 44, 41** | Operating or ready message |
| **L, N, PE** | Mains connection |

**Switch**

**1** Fault/operating message
**2** Operating/ready message
**3** External OFF or external ON

**Included in the scope of delivery**

– Sealing kit
– Screw kit

**Accessories**

– Biral Interface Modules
– Weld neck flange, pair PN10/16, DN65
– Intermediate piece DN65, 135mm, PN16
– Sealing kits for flanges DN65, PN6 or PN16
– Base plate 235x235 KTL

| | **Art. no.** |
|---|---|
| VivarA S 65-8 340 | 7000000611 |

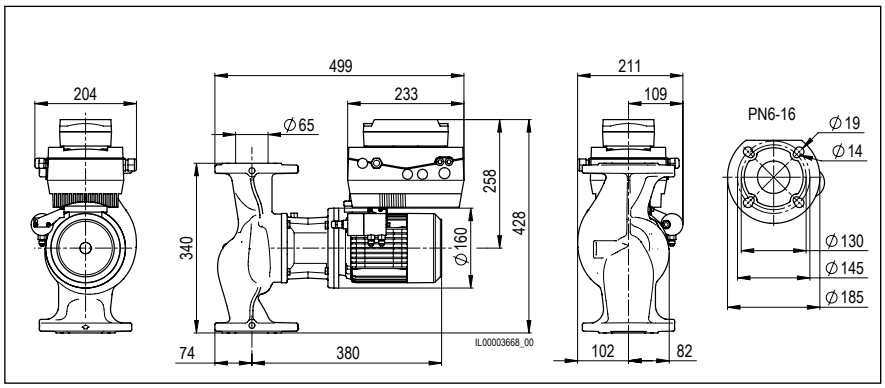


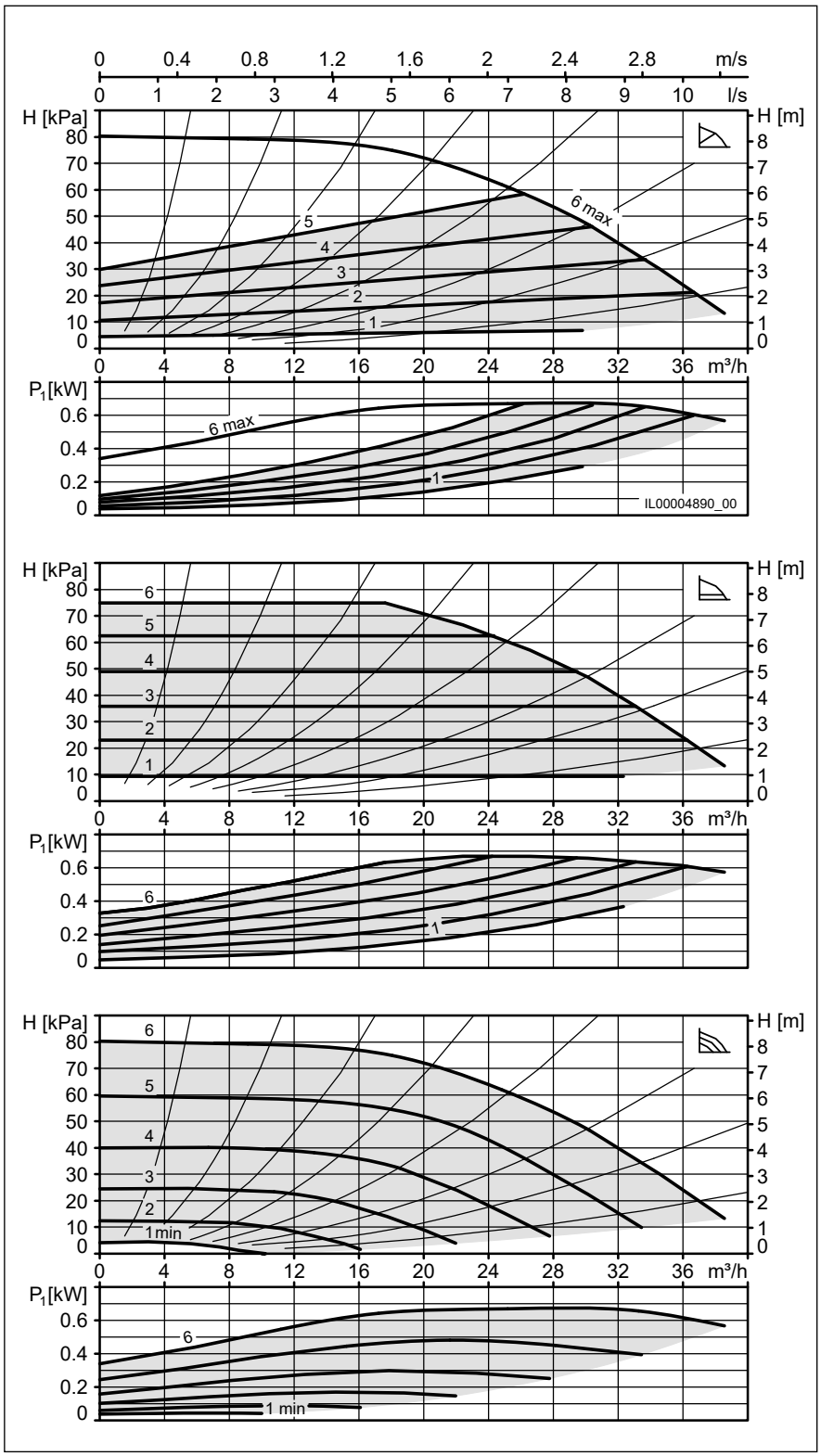

## VivarA S 65-12 340

| | |
|---|---|
| Minimum efficiency index (MEI) | ≥ 0.7 |
| Nominal width | DN 65 |
| Max. flow head H | 12 m |
| Overall length | 340 mm |
| Max. operating pressure | 16 bar |
| Media temperature | -20 °C…+140 °C |
| Ambient temperature | -20 °C…+40 °C |
| Net weight | 27 kg |

**Electrical data**

| | |
|---|---|
| Voltage | 3x400 V |
| Frequency | 50 Hz |
| Input power $P_1$ | 0.96 kW |
| Output power $P_2$ | 0.75 kW |
| Nominal current | 1.74 A |
| Speed | 4000 1/min |
| Motor protection | integrated |
| Protection rating | IP55 |
| Insulation class | F (155°C) |
| Motor efficiency class | IE5 |

**Required operating pressure at 500m a.s.l.**

| | |
|---|---|
| at a water temp. of 75 °C | 0.7 bar |
| at a water temp. of 95 °C | 1.2 bar |
| at a water temp. of 110 °C | 1.7 bar |
| for every ±100 m of altitude | 0.1 bar |

**Connction diagram**

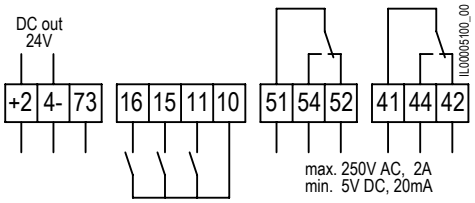


| | |
|---|---|
| **+24-** | 24 V DC out |
| **73** | Actual value input |
| **11,10** | External OFF or external ON (reversible) |
| **10,15** | Digital input minimum speed |
| **10,16** | Digital input maximum speed |
| **52, 54, 51** | Fault message or operating message |
| **42, 44, 41** | Operating or ready message |
| **L, N, PE** | Mains connection |

**Switch**

**1** Fault/operating message
**2** Operating/ready message
**3** External OFF or external ON

**Included in the scope of delivery**

– Sealing kit
– Screw kit

**Accessories**

– Biral Interface Modules
– Weld neck flange, pair PN10/16, DN65
– Intermediate piece DN65, 135mm, PN16
– Sealing kits for flanges DN65, PN6 or PN16
– Base plate 235x235 KTL

| | **Art. no.** |
|---|---|
| VivarA S 65-12 340 | 7000000612 |

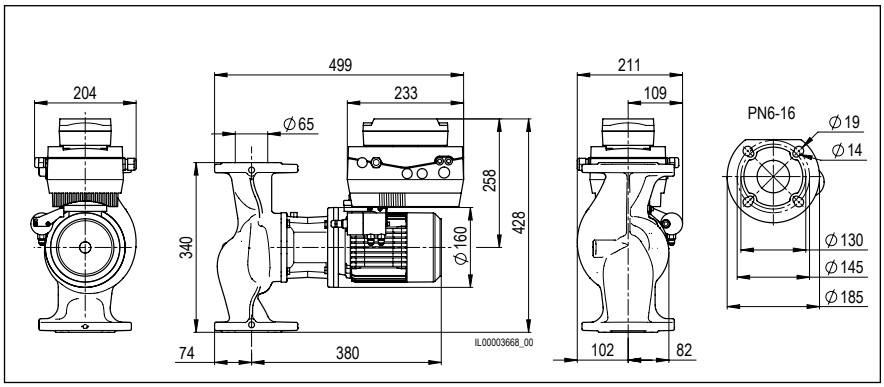


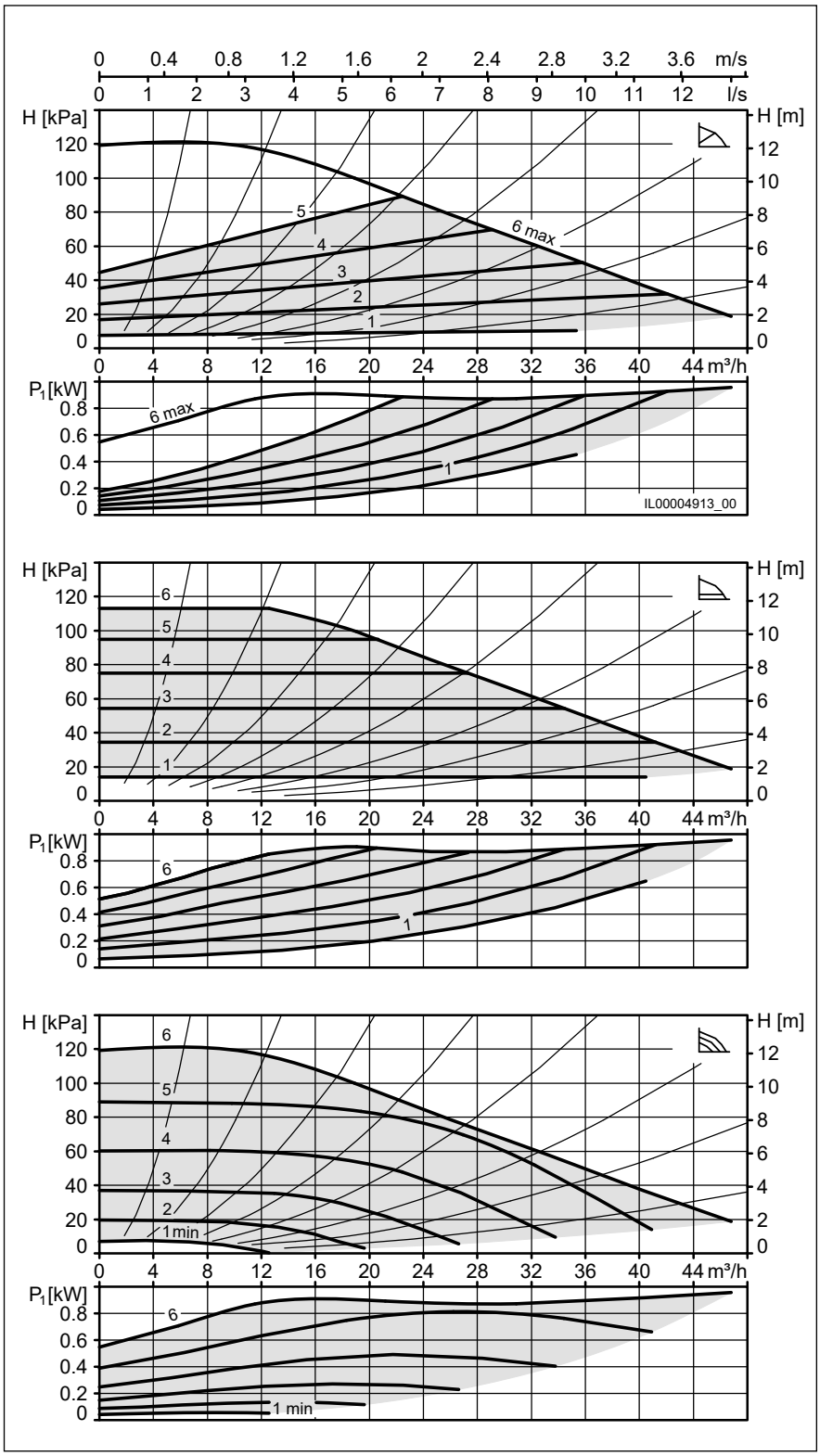

## VivarA S 65-15 340

| | |
|---|---|
| Minimum efficiency index (MEI) | ≥ 0.7 |
| Nominal width | DN 65 |
| Max. flow head H | 15 m |
| Overall length | 340 mm |
| Max. operating pressure | 16 bar |
| Media temperature | -20 °C…+140 °C |
| Ambient temperature | -20 °C…+40 °C |
| Net weight | 29 kg |

### Electrical data

| | |
|---|---|
| Voltage | 3x400 V |
| Frequency | 50 Hz |
| Input power $P_1$ | 1.6 kW |
| Output power $P_2$ | 1.1 kW |
| Nominal current | 2.61 A |
| Speed | 4000 1/min |
| Motor protection | integrated |
| Protection rating | IP55 |
| Insulation class | F (155°C) |
| Motor efficiency class | IE5 |

### Required operating pressure at 500m a.s.l.

| | |
|---|---|
| at a water temp. of 75 °C | 0.7 bar |
| at a water temp. of 95 °C | 1.2 bar |
| at a water temp. of 110 °C | 1.7 bar |
| for every ±100 m of altitude | 0.1 bar |

### Connction diagram

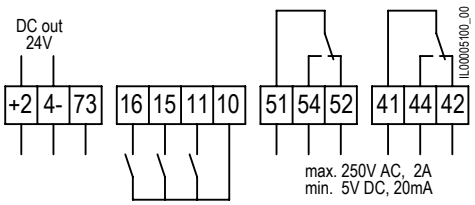


| | |
|---|---|
| **+24-** | 24 V DC out |
| **73** | Actual value input |
| **11,10** | External OFF or external ON (reversible) |
| **10,15** | Digital input minimum speed |
| **10,16** | Digital input maximum speed |
| **52, 54, 51** | Fault message or operating message |
| **42, 44, 41** | Operating or ready message |
| **L, N, PE** | Mains connection |

### Switch

**1** Fault/operating message
**2** Operating/ready message
**3** External OFF or external ON

### Included in the scope of delivery

– Sealing kit
– Screw kit

### Accessories

– Biral Interface Modules
– Weld neck flange, pair PN10/16, DN65
– Intermediate piece DN65, 135mm, PN16
– Sealing kits for flanges DN65, PN6 or PN16
– Base plate 235x235 KTL

| | Art. no. |
|---|---|
| VivarA S 65-15 340 | 7000000613 |

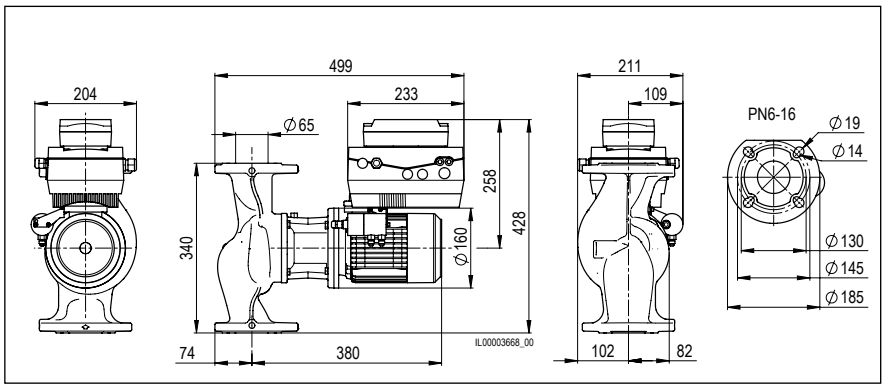


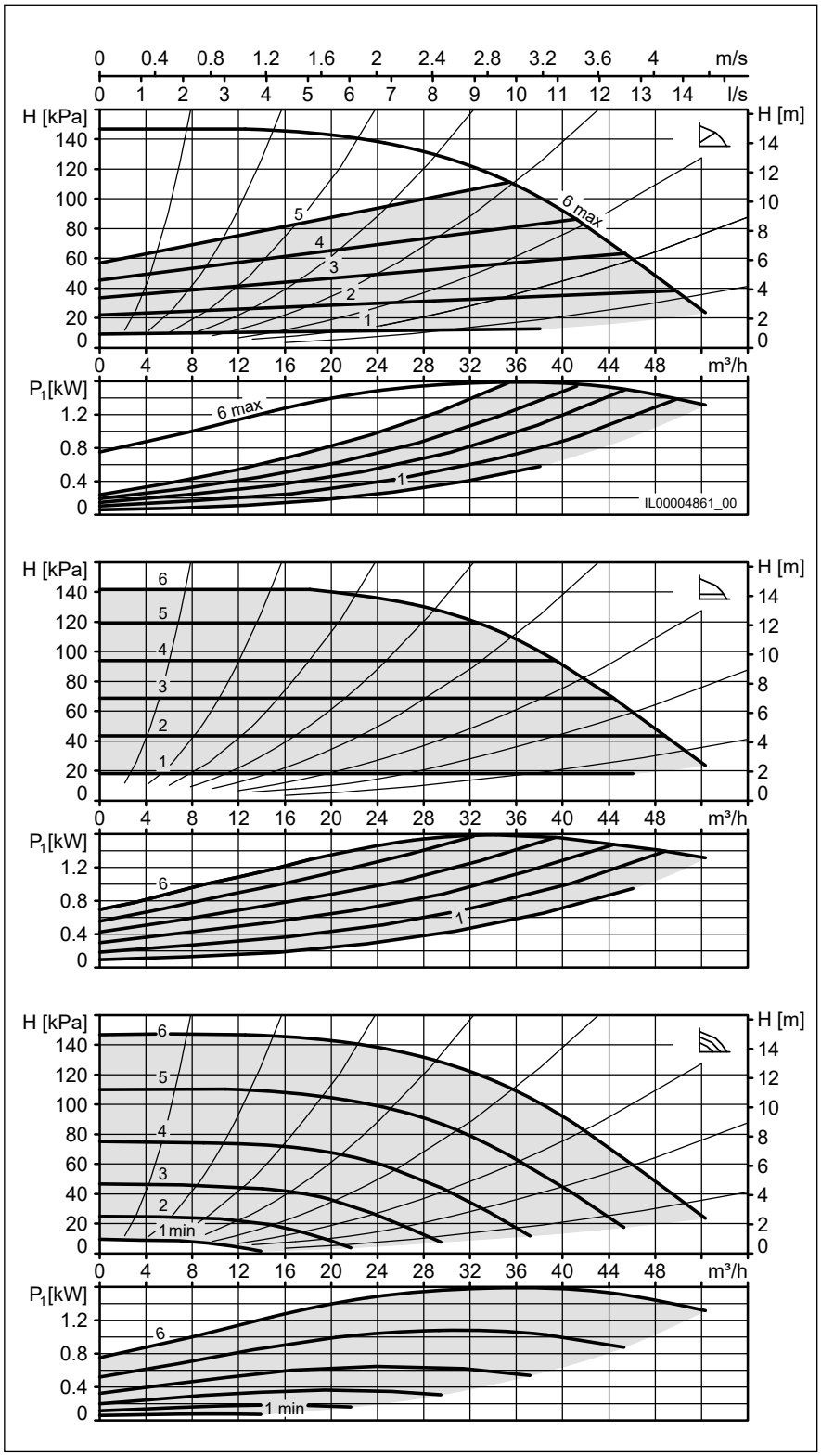

## VivarA S 65-18 340

| | |
|---|---|
| Minimum efficiency index (MEI) | ≥ 0.7 |
| Nominal width | DN 65 |
| Max. flow head H | 18 m |
| Overall length | 340 mm |
| Max. operating pressure | 16 bar |
| Media temperature | -20 °C…+140 °C |
| Ambient temperature | -20 °C…+40 °C |
| Net weight | 29 kg |

**Electrical data**

| | |
|---|---|
| Voltage | 3x400 V |
| Frequency | 50 Hz |
| Input power $P_1$ | 2.09 kW |
| Output power $P_2$ | 1.5 kW |
| Nominal current | 3.51 A |
| Speed | 5900 1/min |
| Motor protection | integrated |
| Protection rating | IP55 |
| Insulation class | F (155°C) |
| Motor efficiency class | IE5 |

**Required operating pressure at 500m a.s.l.**

| | |
|---|---|
| at a water temp. of 75 °C | 0.7 bar |
| at a water temp. of 95 °C | 1.2 bar |
| at a water temp. of 110 °C | 1.7 bar |
| for every ±100 m of altitude | 0.1 bar |

**Connction diagram**

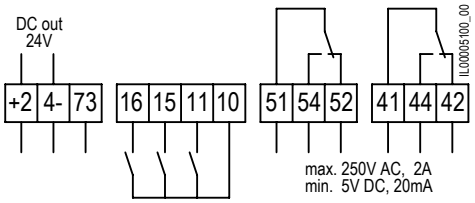


| | |
|---|---|
| **+24-** | 24 V DC out |
| **73** | Actual value input |
| **11,10** | External OFF or external ON (reversible) |
| **10,15** | Digital input minimum speed |
| **10,16** | Digital input maximum speed |
| **52, 54, 51** | Fault message or operating message |
| **42, 44, 41** | Operating or ready message |
| **L, N, PE** | Mains connection |

**Switch**

**1** Fault/operating message
**2** Operating/ready message
**3** External OFF or external ON

**Included in the scope of delivery**

– Sealing kit
– Screw kit

**Accessories**

– Biral Interface Modules
– Weld neck flange, pair PN10/16, DN65
– Intermediate piece DN65, 135mm, PN16
– Sealing kits for flanges DN65, PN6 or PN16
– Base plate 235x235 KTL

| | **Art. no.** |
|---|---|
| VivarA S 65-18 340 | 7000000614 |

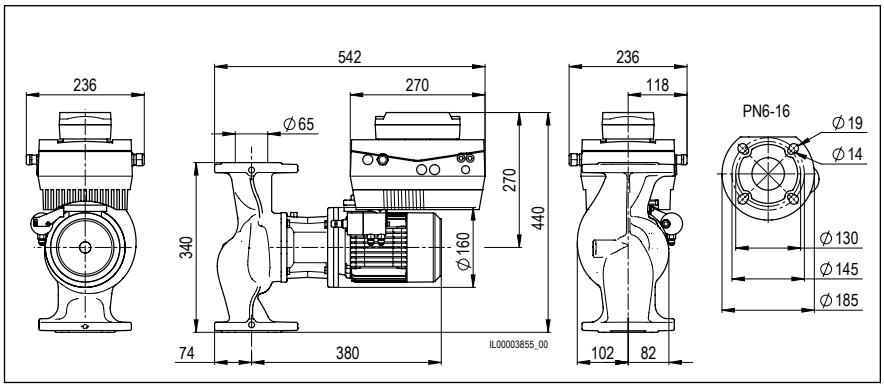


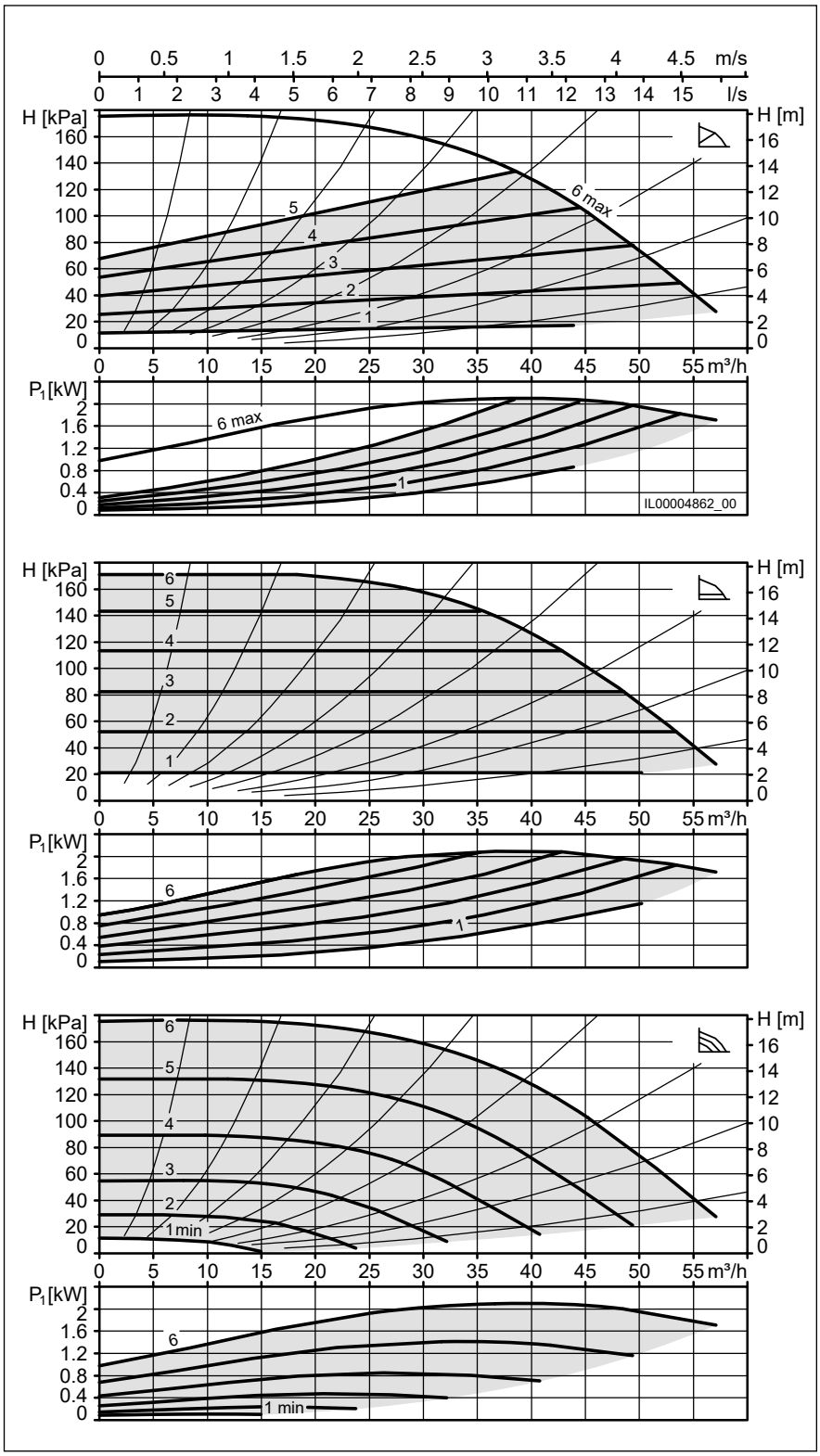

## VivarA S 65-20 340

| | |
|---|---|
| Minimum efficiency index (MEI) | ≥ 0.7 |
| Nominal width | DN 65 |
| Max. flow head H | 20 m |
| Overall length | 340 mm |
| Max. operating pressure | 16 bar |
| Media temperature | -20 °C…+140 °C |
| Ambient temperature | -20 °C…+40 °C |
| Net weight | 29 kg |

**Electrical data**

| | |
|---|---|
| Voltage | 3x400 V |
| Frequency | 50 Hz |
| Input power $P_1$ | 2.38 kW |
| Output power $P_2$ | 2.2 kW |
| Nominal current | 3.94 A |
| Speed | 5900 1/min |
| Motor protection | integrated |
| Protection rating | IP55 |
| Insulation class | F (155°C) |
| Motor efficiency class | IE5 |

**Required operating pressure at 500m a.s.l.**

| | |
|---|---|
| at a water temp. of 75 °C | 0.7 bar |
| at a water temp. of 95 °C | 1.2 bar |
| at a water temp. of 110 °C | 1.7 bar |
| for every ±100 m of altitude | 0.1 bar |

**Connction diagram**

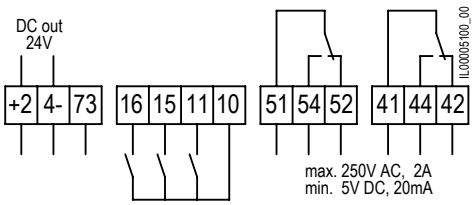


| | |
|---|---|
| **+24-** | 24 V DC out |
| **73** | Actual value input |
| **11,10** | External OFF or external ON (reversible) |
| **10,15** | Digital input minimum speed |
| **10,16** | Digital input maximum speed |
| **52, 54, 51** | Fault message or operating message |
| **42, 44, 41** | Operating or ready message |
| **L, N, PE** | Mains connection |

**Switch**

**1** Fault/operating message
**2** Operating/ready message
**3** External OFF or external ON

**Included in the scope of delivery**

– Sealing kit
– Screw kit

**Accessories**

– Biral Interface Modules
– Weld neck flange, pair PN10/16, DN65
– Intermediate piece DN65, 135mm, PN16
– Sealing kits for flanges DN65, PN6 or PN16
– Base plate 235x235 KTL

| | **Art. no.** |
|---|---|
| VivarA S 65-20 340 | 7000000615 |

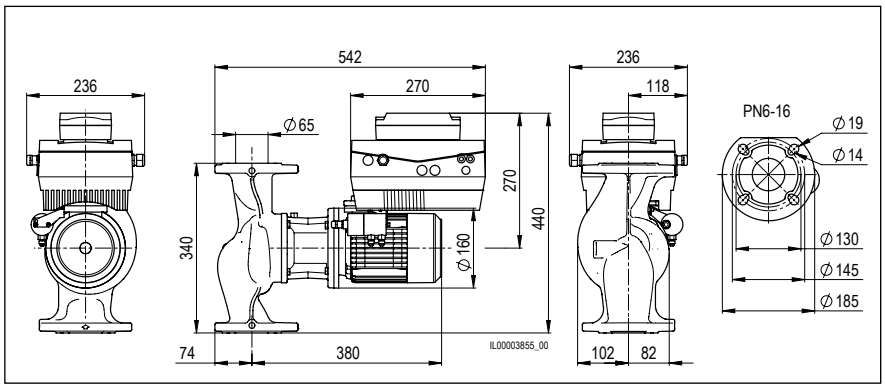


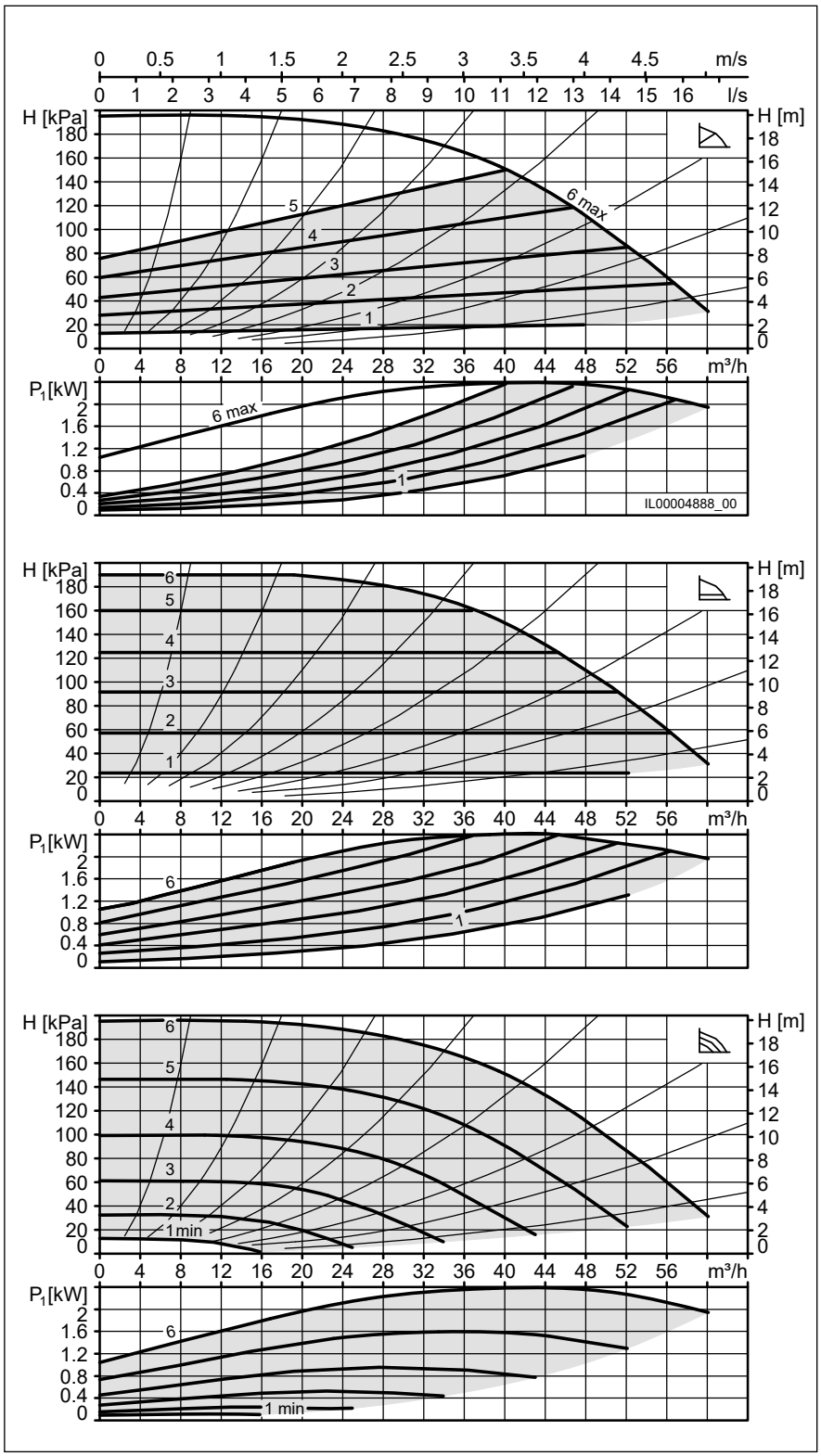


Datasheets

## VivarA M 65-21 340

| | |
|---|---|
| Minimum efficiency index (MEI) | ≥ 0.7 |
| Nominal width | DN 65 |
| Max. flow head H | 21 m |
| Overall length | 340 mm |
| Max. operating pressure | 16 bar |
| Media temperature | -20 °C…+140 °C |
| Ambient temperature | -20 °C…+40 °C |
| Net weight | 51 kg |

**Electrical data**

| | |
|---|---|
| Voltage | 3x400 V |
| Frequency | 50 Hz |
| Input power $P_1$ | 3.24 kW |
| Output power $P_2$ | 3 kW |
| Nominal current | 5.16 A |
| Speed | 3000 1/min |
| Motor protection | integrated |
| Protection rating | IP55 |
| Insulation class | F (155°C) |
| Motor efficiency class | IE5 |

**Required operating pressure at 500m a.s.l.**

| | |
|---|---|
| at a water temp. of 75 °C | 0.7 bar |
| at a water temp. of 95 °C | 1.2 bar |
| at a water temp. of 110 °C | 1.7 bar |
| for every ±100 m of altitude | 0.1 bar |

**Connction diagram**

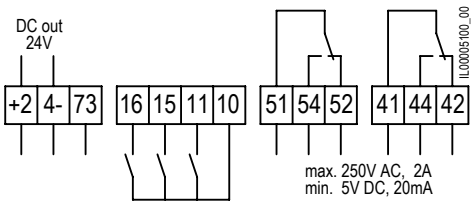


| | |
|---|---|
| **+24-** | 24 V DC out |
| **73** | Actual value input |
| **11,10** | External OFF or external ON (reversible) |
| **10,15** | Digital input minimum speed |
| **10,16** | Digital input maximum speed |
| **52, 54, 51** | Fault message or operating message |
| **42, 44, 41** | Operating or ready message |
| **L, N, PE** | Mains connection |

**Switch**

**1** Fault/operating message
**2** Operating/ready message
**3** External OFF or external ON

**Included in the scope of delivery**

– Sealing kit
– Screw kit

**Accessories**

– Biral Interface Modules
– Weld neck flange, pair PN10/16, DN65
– Intermediate piece DN65, 135mm, PN16
– Sealing kits for flanges DN65, PN6 or PN16
– Base plate 235x235 KTL

| | **Art. no.** |
|---|---|
| VivarA M 65-21 340 | 7000000640 |

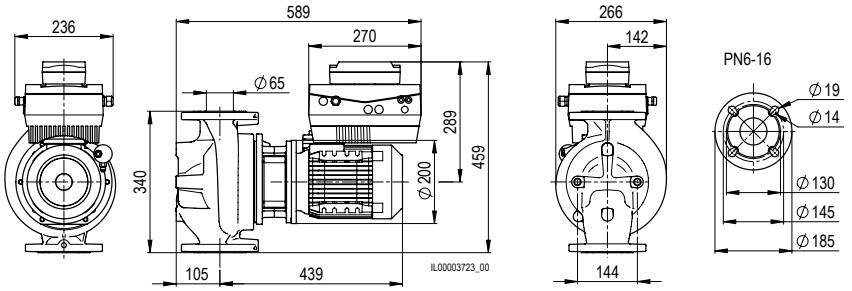


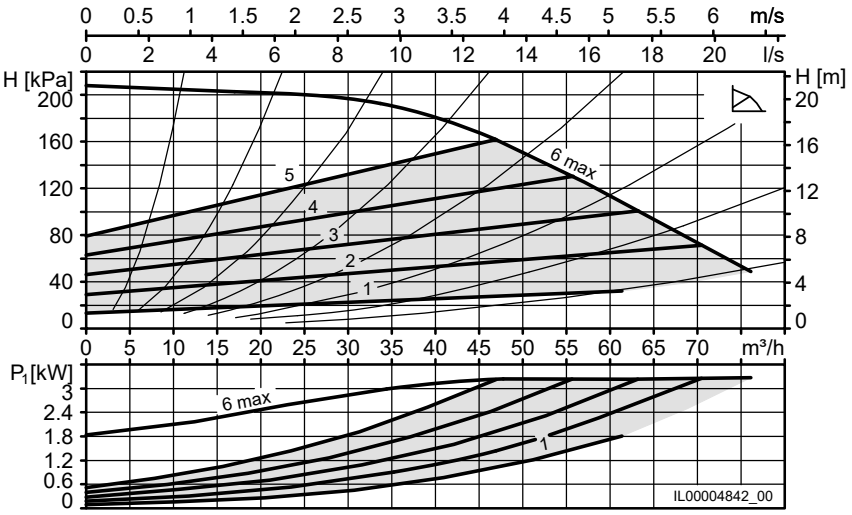


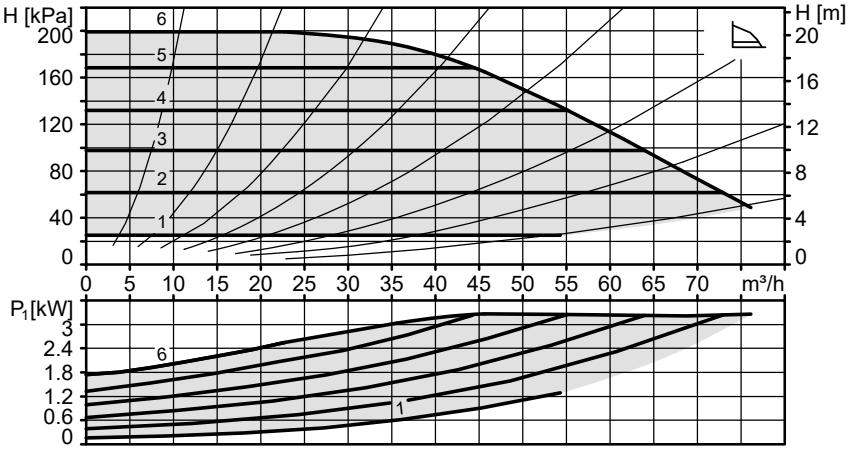


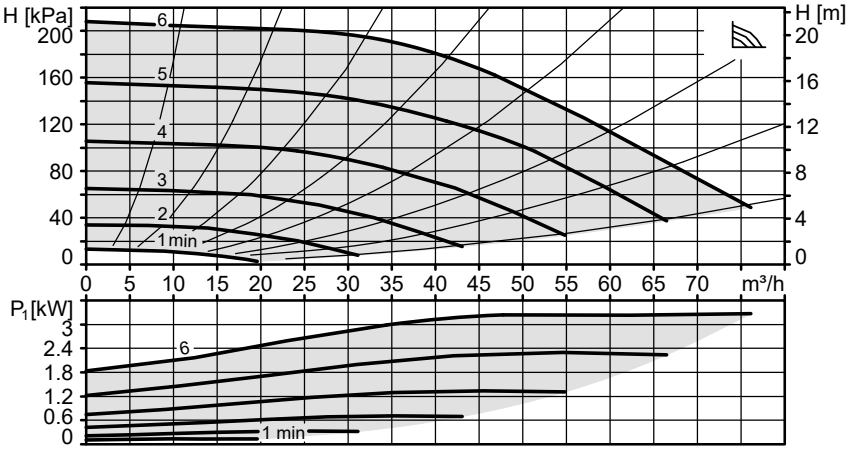

## VivarA M 65-25 340

| | |
|---|---|
| Minimum efficiency index (MEI) | ≥ 0.7 |
| Nominal width | DN 65 |
| Max. flow head H | 25 m |
| Overall length | 340 mm |
| Max. operating pressure | 16 bar |
| Media temperature | -20 °C…+140 °C |
| Ambient temperature | -20 °C…+40 °C |
| Net weight | 53 kg |

**Electrical data**

| | |
|---|---|
| Voltage | 3x400 V |
| Frequency | 50 Hz |
| Input power $P_1$ | 4.44 kW |
| Output power $P_2$ | 4 kW |
| Nominal current | 6.9 A |
| Speed | 3000 1/min |
| Motor protection | integrated |
| Protection rating | IP55 |
| Insulation class | F (155°C) |
| Motor efficiency class | IE5 |

**Required operating pressure at 500m a.s.l.**

| | |
|---|---|
| at a water temp. of 75 °C | 0.7 bar |
| at a water temp. of 95 °C | 1.2 bar |
| at a water temp. of 110 °C | 1.7 bar |
| for every ±100 m of altitude | 0.1 bar |

**Connction diagram**

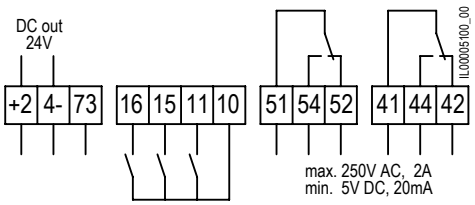


| | |
|---|---|
| **+24-** | 24 V DC out |
| **73** | Actual value input |
| **11,10** | External OFF or external ON (reversible) |
| **10,15** | Digital input minimum speed |
| **10,16** | Digital input maximum speed |
| **52, 54, 51** | Fault message or operating message |
| **42, 44, 41** | Operating or ready message |
| **L, N, PE** | Mains connection |

**Switch**

**1** Fault/operating message
**2** Operating/ready message
**3** External OFF or external ON

**Included in the scope of delivery**

– Sealing kit
– Screw kit

**Accessories**

– Biral Interface Modules
– Weld neck flange, pair PN10/16, DN65
– Intermediate piece DN65, 135mm, PN16
– Sealing kits for flanges DN65, PN6 or PN16
– Base plate 235x235 KTL

| | **Art. no.** |
|---|---|
| VivarA M 65-25 340 | 7000000641 |

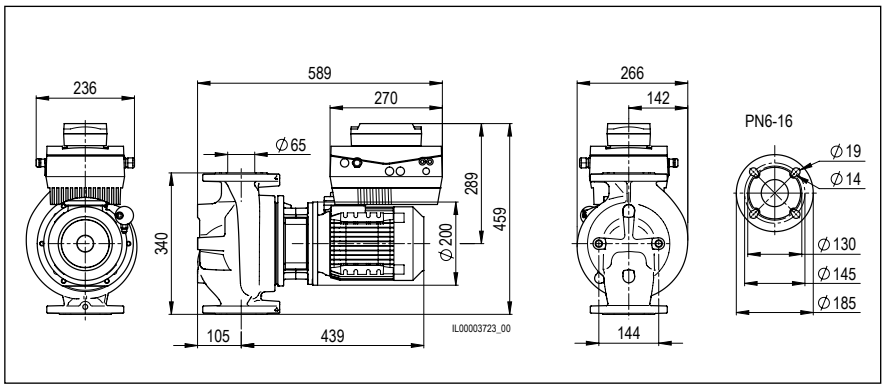


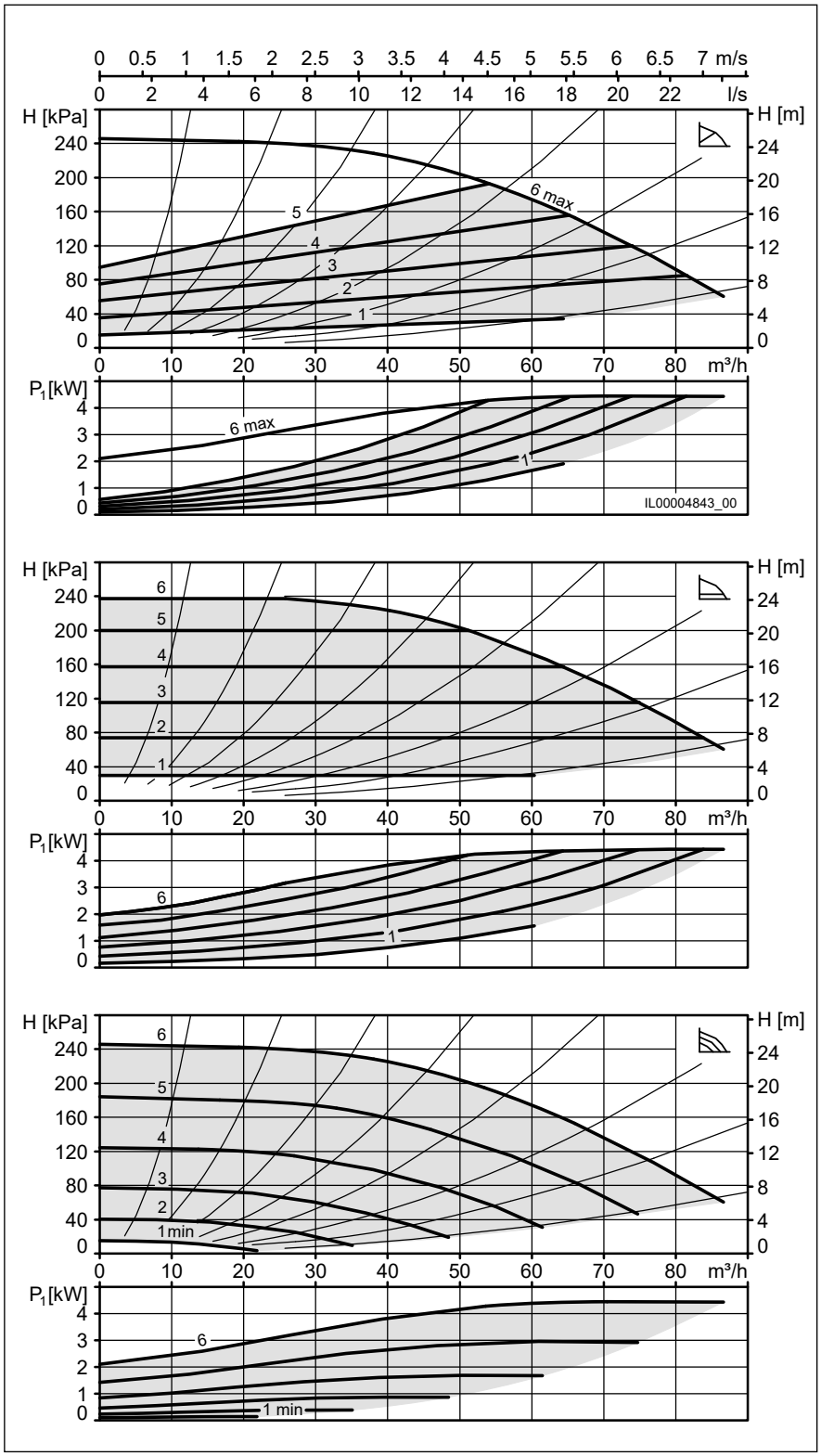

## VivarA M 65-34 340

| | |
|---|---|
| Minimum efficiency index (MEI) | ≥ 0.7 |
| Nominal width | DN 65 |
| Max. flow head H | 34 m |
| Overall length | 340 mm |
| Max. operating pressure | 16 bar |
| Media temperature | -20 °C…+140 °C |
| Ambient temperature | -20 °C…+40 °C |
| Net weight | 60 kg |

**Electrical data**

| | |
|---|---|
| Voltage | 3x400 V |
| Frequency | 50 Hz |
| Input power $P_1$ | 6.25 kW |
| Output power $P_2$ | 5.5 kW |
| Nominal current | 10.04 A |
| Speed | 3000 1/min |
| Motor protection | integrated |
| Protection rating | IP55 |
| Insulation class | F (155°C) |
| Motor efficiency class | IE5 |

**Required operating pressure at 500m a.s.l.**

| | |
|---|---|
| at a water temp. of 75 °C | 0.7 bar |
| at a water temp. of 95 °C | 1.2 bar |
| at a water temp. of 110 °C | 1.7 bar |
| for every ±100 m of altitude | 0.1 bar |

**Connction diagram**

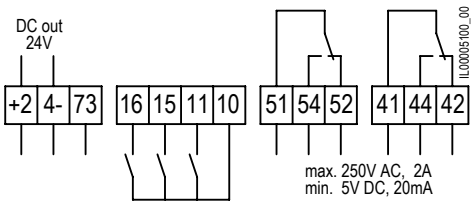


| | |
|---|---|
| **+24-** | 24 V DC out |
| **73** | Actual value input |
| **11,10** | External OFF or external ON (reversible) |
| **10,15** | Digital input minimum speed |
| **10,16** | Digital input maximum speed |
| **52, 54, 51** | Fault message or operating message |
| **42, 44, 41** | Operating or ready message |
| **L, N, PE** | Mains connection |

**Switch**

**1** Fault/operating message
**2** Operating/ready message
**3** External OFF or external ON

**Included in the scope of delivery**

– Sealing kit
– Screw kit

**Accessories**

– Biral Interface Modules
– Weld neck flange, pair PN10/16, DN65
– Intermediate piece DN65, 135mm, PN16
– Sealing kits for flanges DN65, PN6 or PN16
– Base plate 235x235 KTL

| | **Art. no.** |
|---|---|
| VivarA M 65-34 340 | 7000000642 |

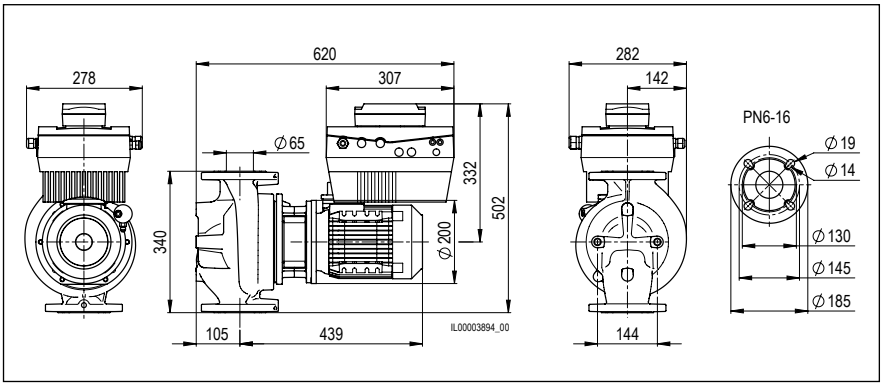


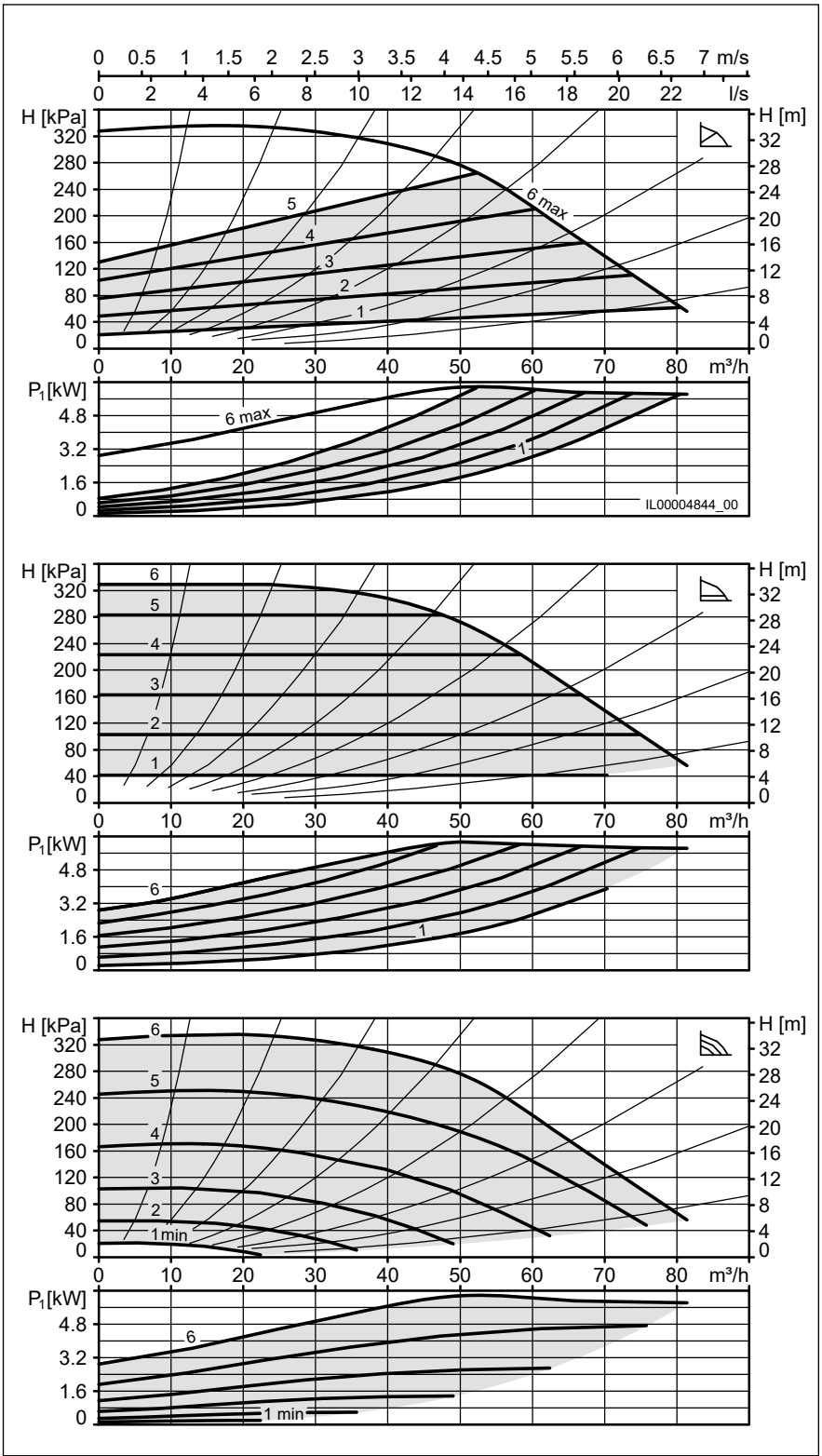

## VivarA M 65-41 340

| | |
|---|---|
| Minimum efficiency index (MEI) | ≥ 0.7 |
| Nominal width | DN 65 |
| Max. flow head H | 41 m |
| Overall length | 340 mm |
| Max. operating pressure | 16 bar |
| Media temperature | -20 °C…+140 °C |
| Ambient temperature | -20 °C…+40 °C |
| Net weight | 72 kg |

**Electrical data**

| | |
|---|---|
| Voltage | 3x400 V |
| Frequency | 50 Hz |
| Input power $P_1$ | 7.77 kW |
| Output power $P_2$ | 7.5 kW |
| Nominal current | 12.38 A |
| Speed | 3000 1/min |
| Motor protection | integrated |
| Protection rating | IP55 |
| Insulation class | F (155°C) |
| Motor efficiency class | IE5 |

**Required operating pressure at 500m a.s.l.**

| | |
|---|---|
| at a water temp. of 75 °C | 0.7 bar |
| at a water temp. of 95 °C | 1.2 bar |
| at a water temp. of 110 °C | 1.7 bar |
| for every ±100 m of altitude | 0.1 bar |

**Connction diagram**

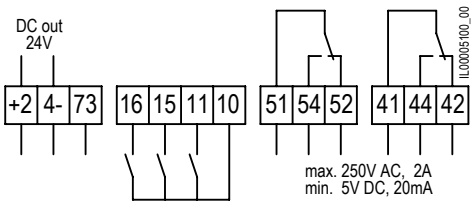


| | |
|---|---|
| **+24-** | 24 V DC out |
| **73** | Actual value input |
| **11,10** | External OFF or external ON (reversible) |
| **10,15** | Digital input minimum speed |
| **10,16** | Digital input maximum speed |
| **52, 54, 51** | Fault message or operating message |
| **42, 44, 41** | Operating or ready message |
| **L, N, PE** | Mains connection |

**Switch**

**1** Fault/operating message
**2** Operating/ready message
**3** External OFF or external ON

**Included in the scope of delivery**

– Sealing kit
– Screw kit

**Accessories**

– Biral Interface Modules
– Weld neck flange, pair PN10/16, DN65
– Intermediate piece DN65, 135mm, PN16
– Sealing kits for flanges DN65, PN6 or PN16
– Base plate 235x235 KTL

| | **Art. no.** |
|---|---|
| VivarA M 65-41 340 | 7000000643 |

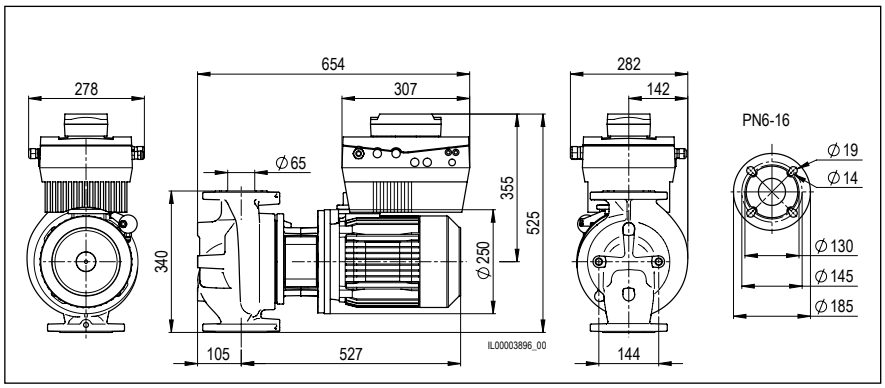


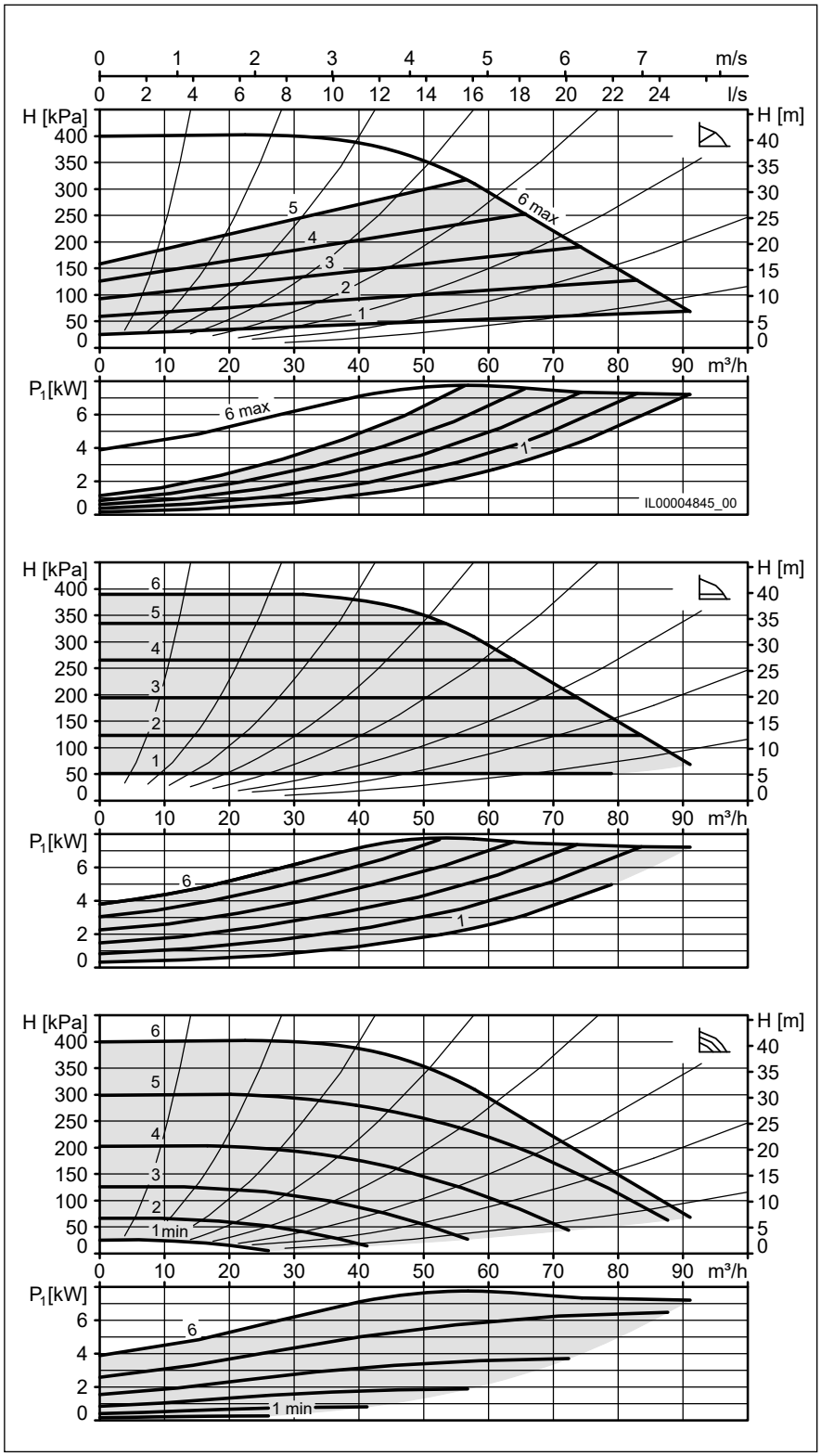


Datasheets

## VivarA S 80-12 360 PN6

| | |
|---|---|
| Minimum efficiency index (MEI) | ≥ 0.7 |
| Nominal width | DN 80 |
| Max. flow head H | 12 m |
| Overall length | 360 mm |
| Max. operating pressure | 6 bar |
| Media temperature | -20 °C…+140 °C |
| Ambient temperature | -20 °C…+40 °C |
| Net weight | 34 kg |

### Electrical data

| | |
|---|---|
| Voltage | 3x400 V |
| Frequency | 50 Hz |
| Input power $P_1$ | 1.57 kW |
| Output power $P_2$ | 1.1 kW |
| Nominal current | 2.58 A |
| Speed | 4000 1/min |
| Motor protection | integrated |
| Protection rating | IP55 |
| Insulation class | F (155°C) |
| Motor efficiency class | IE5 |

### Required operating pressure at 500m a.s.l.

| | |
|---|---|
| at a water temp. of 75 °C | 0.7 bar |
| at a water temp. of 95 °C | 1.2 bar |
| at a water temp. of 110 °C | 1.7 bar |
| for every ±100 m of altitude | 0.1 bar |

### Connction diagram

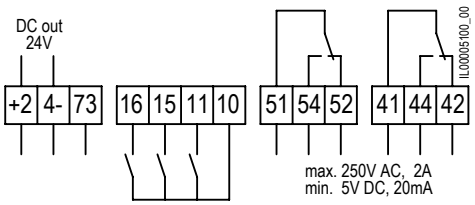


| | |
|---|---|
| **+24-** | 24 V DC out |
| **73** | Actual value input |
| **11,10** | External OFF or external ON (reversible) |
| **10,15** | Digital input minimum speed |
| **10,16** | Digital input maximum speed |
| **52, 54, 51** | Fault message or operating message |
| **42, 44, 41** | Operating or ready message |
| **L, N, PE** | Mains connection |

### Switch

**1** Fault/operating message
**2** Operating/ready message
**3** External OFF or external ON

### Included in the scope of delivery

– Sealing kit
– Screw kit

### Accessories

– Biral Interface Modules
– Weld neck flange, pair PN10/16, DN80
– Intermediate piece DN80, PN16
– Sealing kits for flanges DN80, PN6 or PN16
– Base plate 235x235 KTL

| | Art. no. |
|---|---|
| VivarA S 80-12 360 PN6 | 7000000618 |

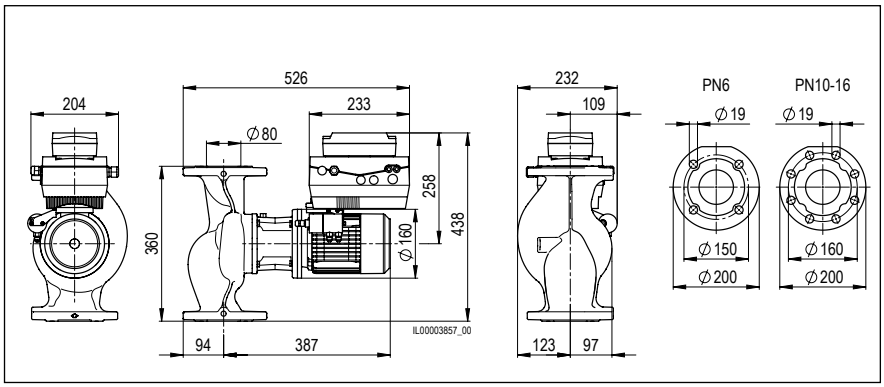


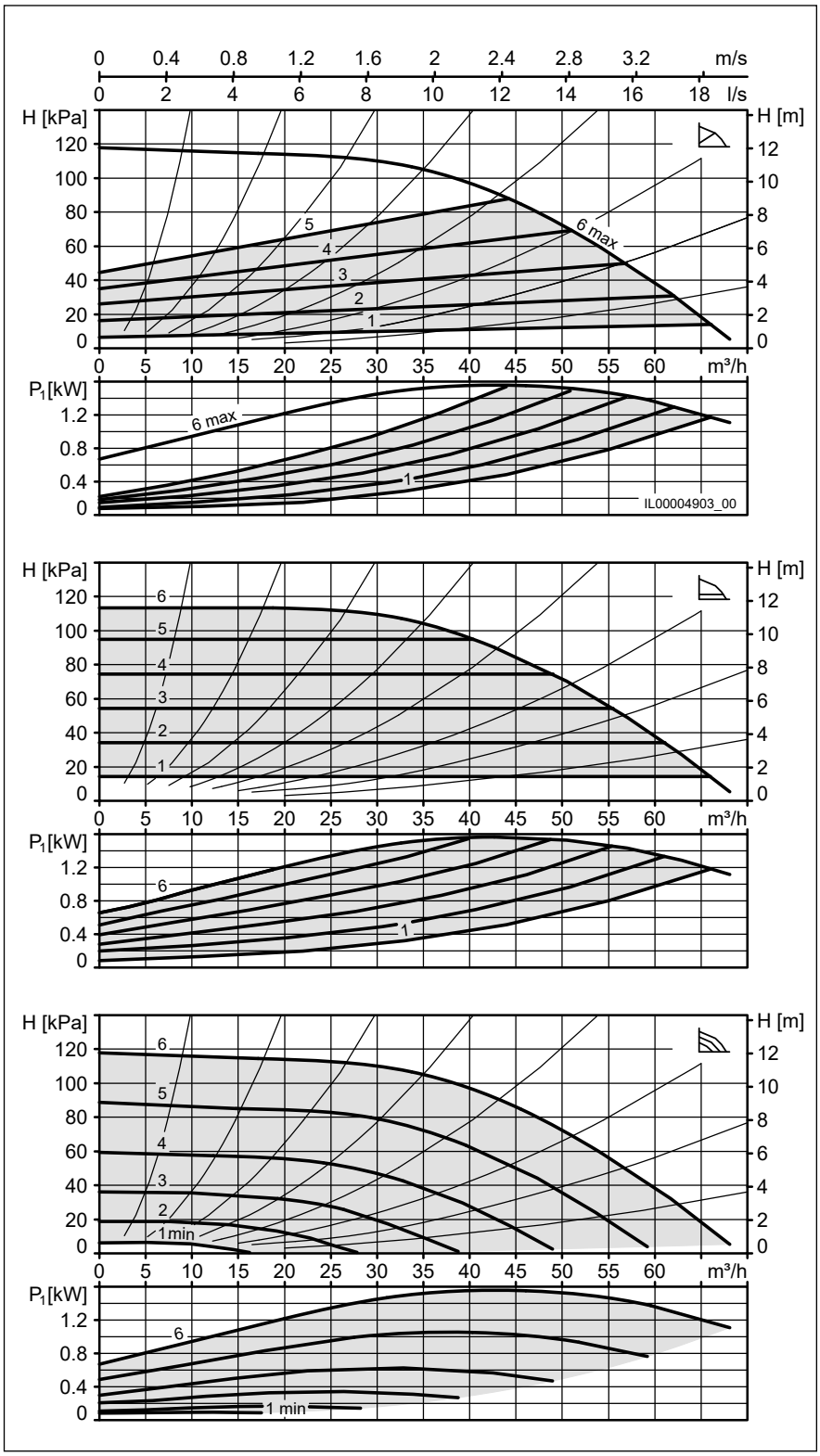

## VivarA S 80-12 360

| | |
|---|---|
| Minimum efficiency index (MEI) | ≥ 0.7 |
| Nominal width | DN 80 |
| Max. flow head H | 12 m |
| Overall length | 360 mm |
| Max. operating pressure | 16 bar |
| Media temperature | -20 °C…+140 °C |
| Ambient temperature | -20 °C…+40 °C |
| Net weight | 34 kg |

**Electrical data**

| | |
|---|---|
| Voltage | 3x400 V |
| Frequency | 50 Hz |
| Input power $P_1$ | 1.57 kW |
| Output power $P_2$ | 1.1 kW |
| Nominal current | 2.58 A |
| Speed | 4000 1/min |
| Motor protection | integrated |
| Protection rating | IP55 |
| Insulation class | F (155°C) |
| Motor efficiency class | IE5 |

**Required operating pressure at 500m a.s.l.**

| | |
|---|---|
| at a water temp. of 75 °C | 0.7 bar |
| at a water temp. of 95 °C | 1.2 bar |
| at a water temp. of 110 °C | 1.7 bar |
| for every ±100 m of altitude | 0.1 bar |

**Connction diagram**

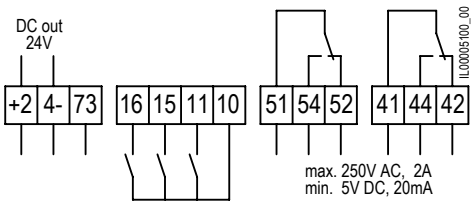


| | |
|---|---|
| **+24-** | 24 V DC out |
| **73** | Actual value input |
| **11,10** | External OFF or external ON (reversible) |
| **10,15** | Digital input minimum speed |
| **10,16** | Digital input maximum speed |
| **52, 54, 51** | Fault message or operating message |
| **42, 44, 41** | Operating or ready message |
| **L, N, PE** | Mains connection |

**Switch**

**1** Fault/operating message
**2** Operating/ready message
**3** External OFF or external ON

**Included in the scope of delivery**

– Sealing kit
– Screw kit

**Accessories**

– Biral Interface Modules
– Weld neck flange, pair PN10/16, DN80
– Intermediate piece DN80, PN16
– Sealing kits for flanges DN80, PN6 or PN16
– Base plate 235x235 KTL

| | **Art. no.** |
|---|---|
| VivarA S 80-12 360 | 7000000619 |

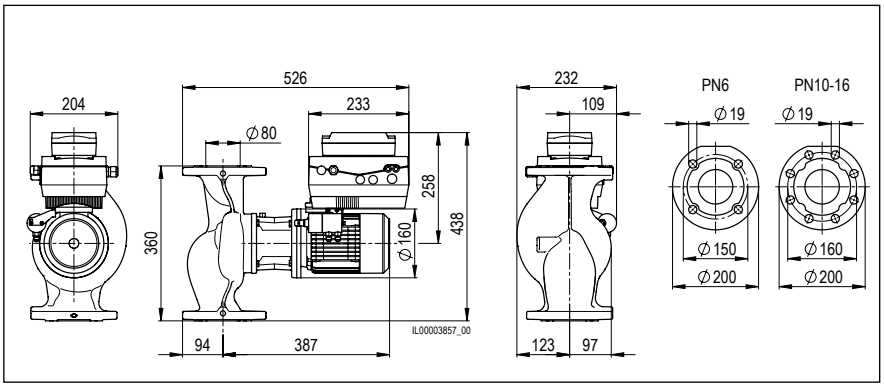


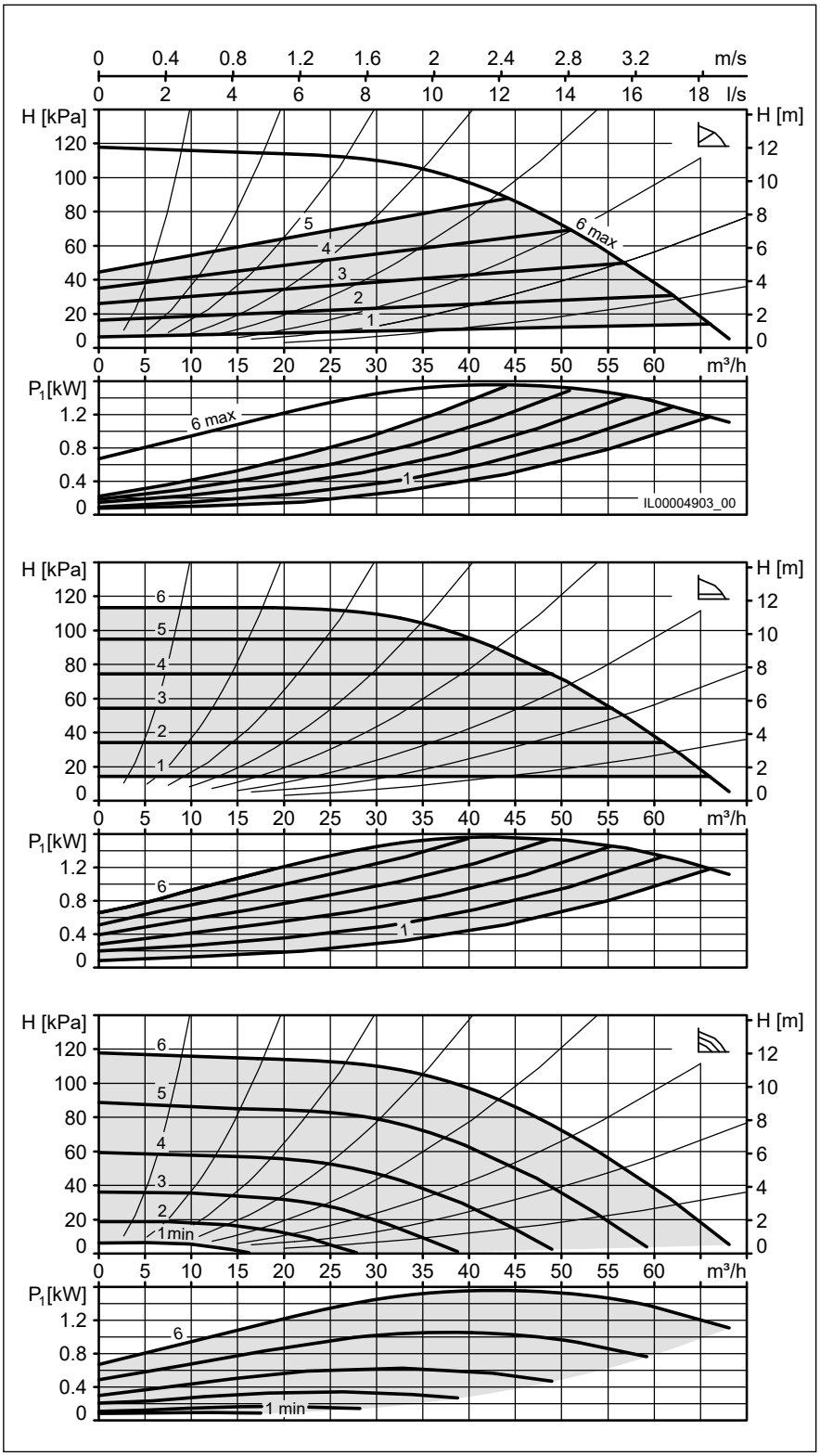


Datasheets

## VivarA S 80-15 360 PN6

| | |
|---|---|
| Minimum efficiency index (MEI) | ≥ 0.7 |
| Nominal width | DN 80 |
| Max. flow head H | 15 m |
| Overall length | 360 mm |
| Max. operating pressure | 6 bar |
| Media temperature | -20 °C…+140 °C |
| Ambient temperature | -20 °C…+40 °C |
| Net weight | 36 kg |

### Electrical data

| | |
|---|---|
| Voltage | 3x400 V |
| Frequency | 50 Hz |
| Input power $P_1$ | 2.15 kW |
| Output power $P_2$ | 1.5 kW |
| Nominal current | 3.58 A |
| Speed | 4000 1/min |
| Motor protection | integrated |
| Protection rating | IP55 |
| Insulation class | F (155°C) |
| Motor efficiency class | IE5 |

### Required operating pressure at 500m a.s.l.

| | |
|---|---|
| at a water temp. of 75 °C | 0.7 bar |
| at a water temp. of 95 °C | 1.2 bar |
| at a water temp. of 110 °C | 1.7 bar |
| for every ±100 m of altitude | 0.1 bar |

### Connction diagram

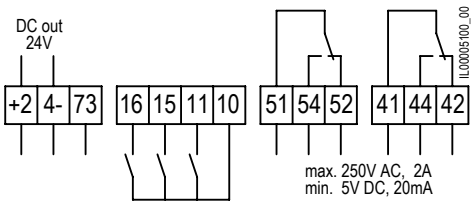


| | |
|---|---|
| **+24-** | 24 V DC out |
| **73** | Actual value input |
| **11,10** | External OFF or external ON (reversible) |
| **10,15** | Digital input minimum speed |
| **10,16** | Digital input maximum speed |
| **52, 54, 51** | Fault message or operating message |
| **42, 44, 41** | Operating or ready message |
| **L, N, PE** | Mains connection |

### Switch

**1** Fault/operating message
**2** Operating/ready message
**3** External OFF or external ON

### Included in the scope of delivery

– Sealing kit
– Screw kit

### Accessories

– Biral Interface Modules
– Weld neck flange, pair PN10/16, DN80
– Intermediate piece DN80, PN16
– Sealing kits for flanges DN80, PN6 or PN16
– Base plate 235x235 KTL

| | Art. no. |
|---|---|
| VivarA S 80-15 360 PN6 | 7000000620 |

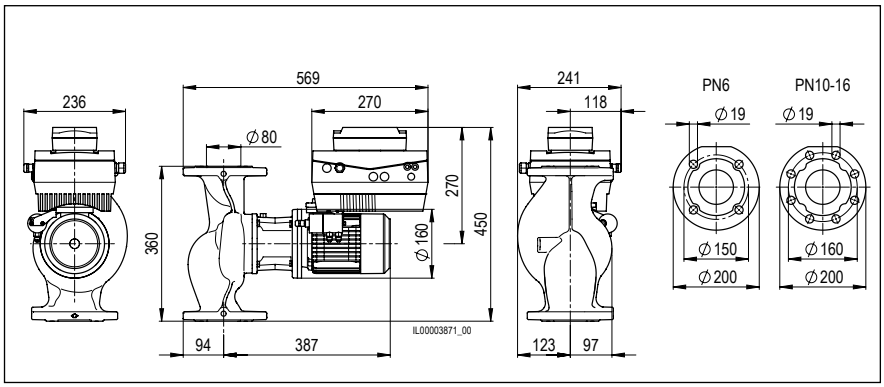


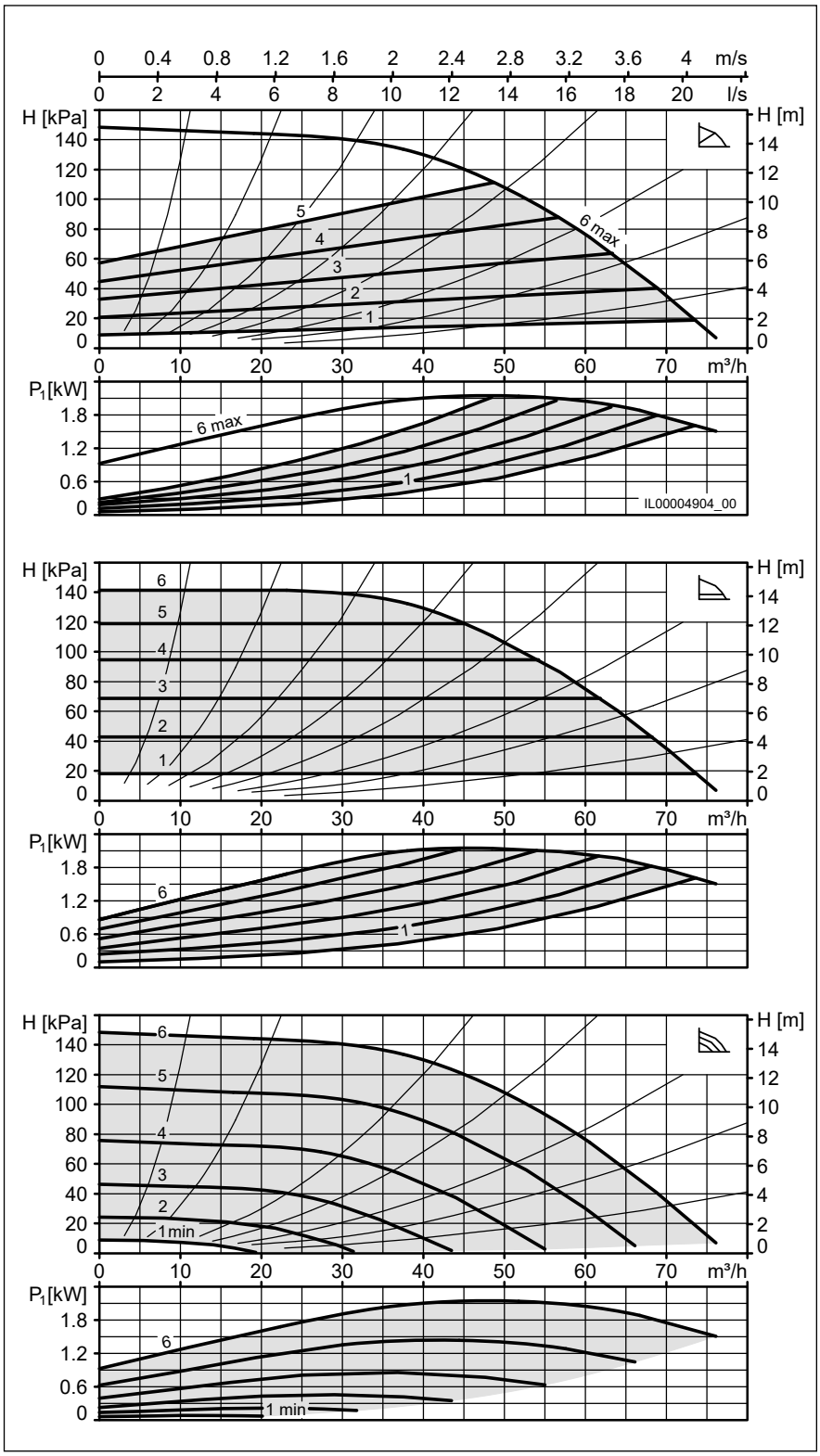

## VivarA S 80-15 360

| | |
|---|---|
| Minimum efficiency index (MEI) | ≥ 0.7 |
| Nominal width | DN 80 |
| Max. flow head H | 15 m |
| Overall length | 360 mm |
| Max. operating pressure | 16 bar |
| Media temperature | -20 °C…+140 °C |
| Ambient temperature | -20 °C…+40 °C |
| Net weight | 36 kg |

**Electrical data**

| | |
|---|---|
| Voltage | 3x400 V |
| Frequency | 50 Hz |
| Input power $P_1$ | 2.15 kW |
| Output power $P_2$ | 1.5 kW |
| Nominal current | 3.58 A |
| Speed | 4000 1/min |
| Motor protection | integrated |
| Protection rating | IP55 |
| Insulation class | F (155°C) |
| Motor efficiency class | IE5 |

**Required operating pressure at 500m a.s.l.**

| | |
|---|---|
| at a water temp. of 75 °C | 0.7 bar |
| at a water temp. of 95 °C | 1.2 bar |
| at a water temp. of 110 °C | 1.7 bar |
| for every ±100 m of altitude | 0.1 bar |

**Connction diagram**

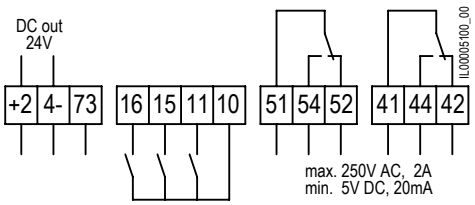


| | |
|---|---|
| **+24-** | 24 V DC out |
| **73** | Actual value input |
| **11,10** | External OFF or external ON (reversible) |
| **10,15** | Digital input minimum speed |
| **10,16** | Digital input maximum speed |
| **52, 54, 51** | Fault message or operating message |
| **42, 44, 41** | Operating or ready message |
| **L, N, PE** | Mains connection |

**Switch**

**1** Fault/operating message
**2** Operating/ready message
**3** External OFF or external ON

**Included in the scope of delivery**

– Sealing kit
– Screw kit

**Accessories**

– Biral Interface Modules
– Weld neck flange, pair PN10/16, DN80
– Intermediate piece DN80, PN16
– Sealing kits for flanges DN80, PN6 or PN16
– Base plate 235x235 KTL

| | **Art. no.** |
|---|---|
| VivarA S 80-15 360 | 7000000621 |

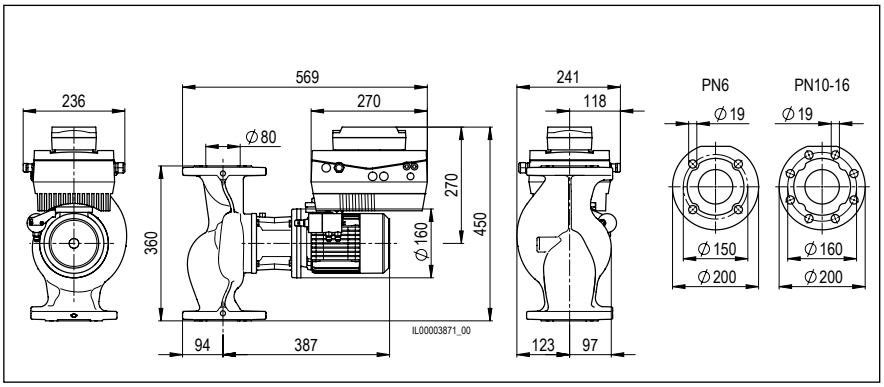


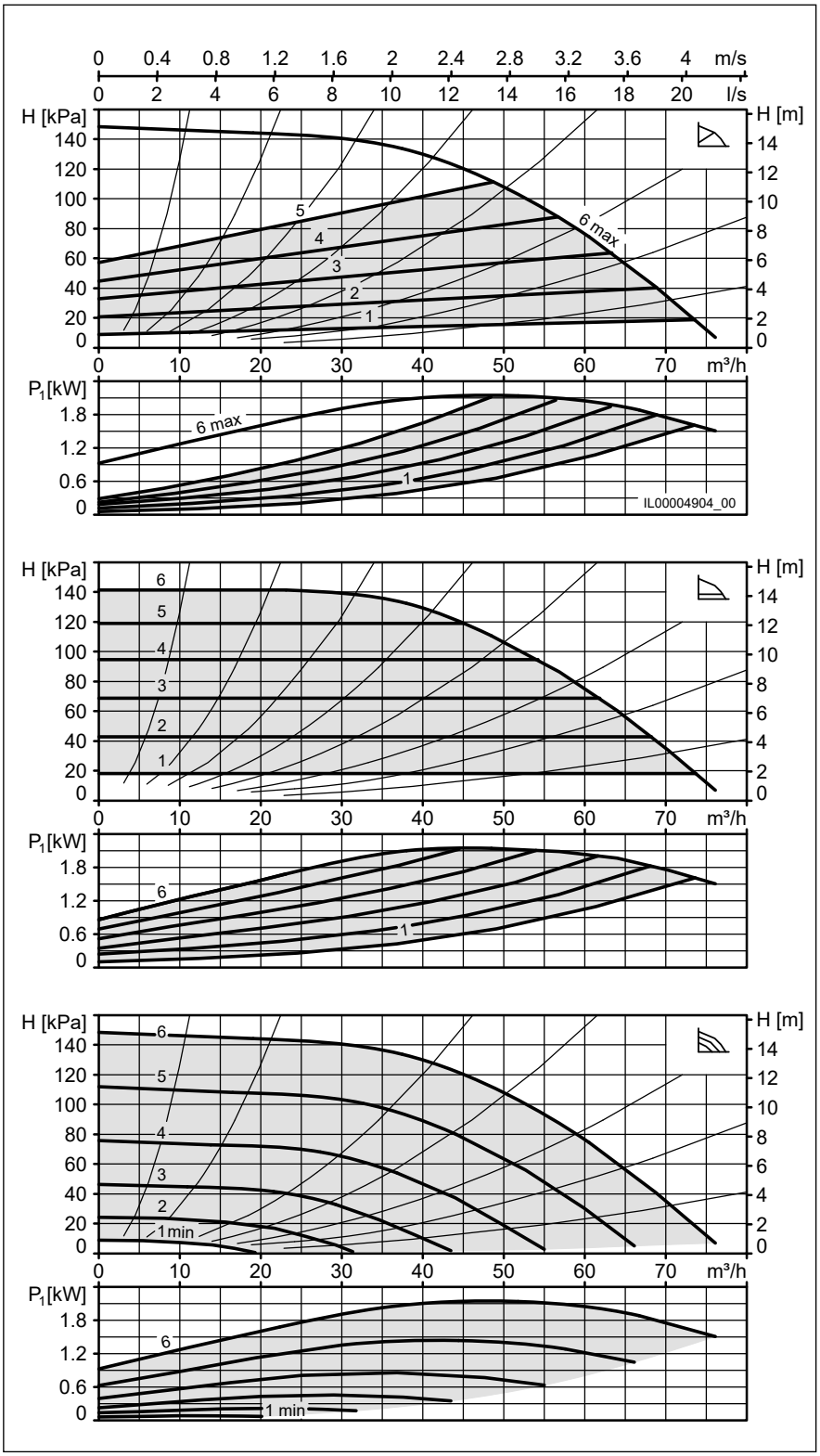

## VivarA S 80-18 360 PN6

| | |
|---|---|
| Minimum efficiency index (MEI) | ≥ 0.7 |
| Nominal width | DN 80 |
| Max. flow head H | 18 m |
| Overall length | 360 mm |
| Max. operating pressure | 6 bar |
| Media temperature | -20 °C…+140 °C |
| Ambient temperature | -20 °C…+40 °C |
| Net weight | 36 kg |

**Electrical data**

| | |
|---|---|
| Voltage | 3x400 V |
| Frequency | 50 Hz |
| Input power $P_1$ | 2.68 kW |
| Output power $P_2$ | 2.2 kW |
| Nominal current | 4.26 A |
| Speed | 4000 1/min |
| Motor protection | integrated |
| Protection rating | IP55 |
| Insulation class | F (155°C) |
| Motor efficiency class | IE5 |

**Required operating pressure at 500m a.s.l.**

| | |
|---|---|
| at a water temp. of 75 °C | 0.7 bar |
| at a water temp. of 95 °C | 1.2 bar |
| at a water temp. of 110 °C | 1.7 bar |
| for every ±100 m of altitude | 0.1 bar |

**Connction diagram**

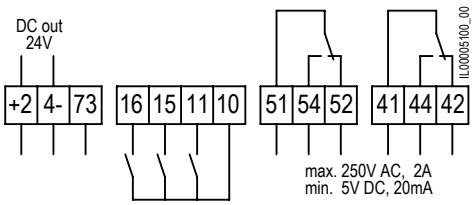


| | |
|---|---|
| **+24-** | 24 V DC out |
| **73** | Actual value input |
| **11,10** | External OFF or external ON (reversible) |
| **10,15** | Digital input minimum speed |
| **10,16** | Digital input maximum speed |
| **52, 54, 51** | Fault message or operating message |
| **42, 44, 41** | Operating or ready message |
| **L, N, PE** | Mains connection |

**Switch**

**1** Fault/operating message
**2** Operating/ready message
**3** External OFF or external ON

**Included in the scope of delivery**

– Sealing kit
– Screw kit

**Accessories**

– Biral Interface Modules
– Weld neck flange, pair PN10/16, DN80
– Intermediate piece DN80, PN16
– Sealing kits for flanges DN80, PN6 or PN16
– Base plate 235x235 KTL

| | **Art. no.** |
|---|---|
| VivarA S 80-18 360 PN6 | 7000000622 |

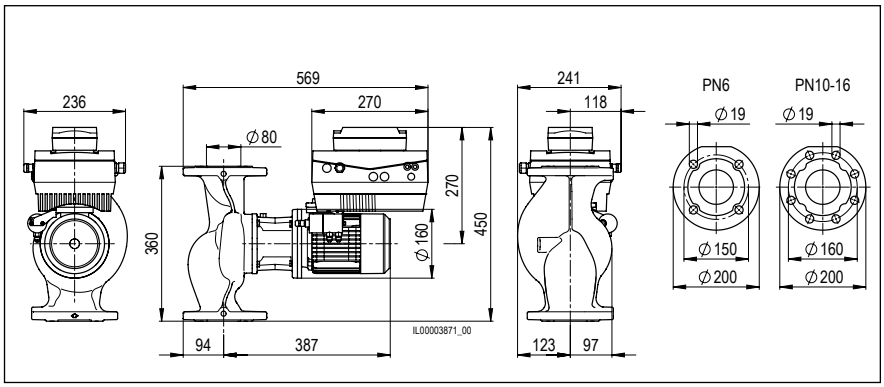


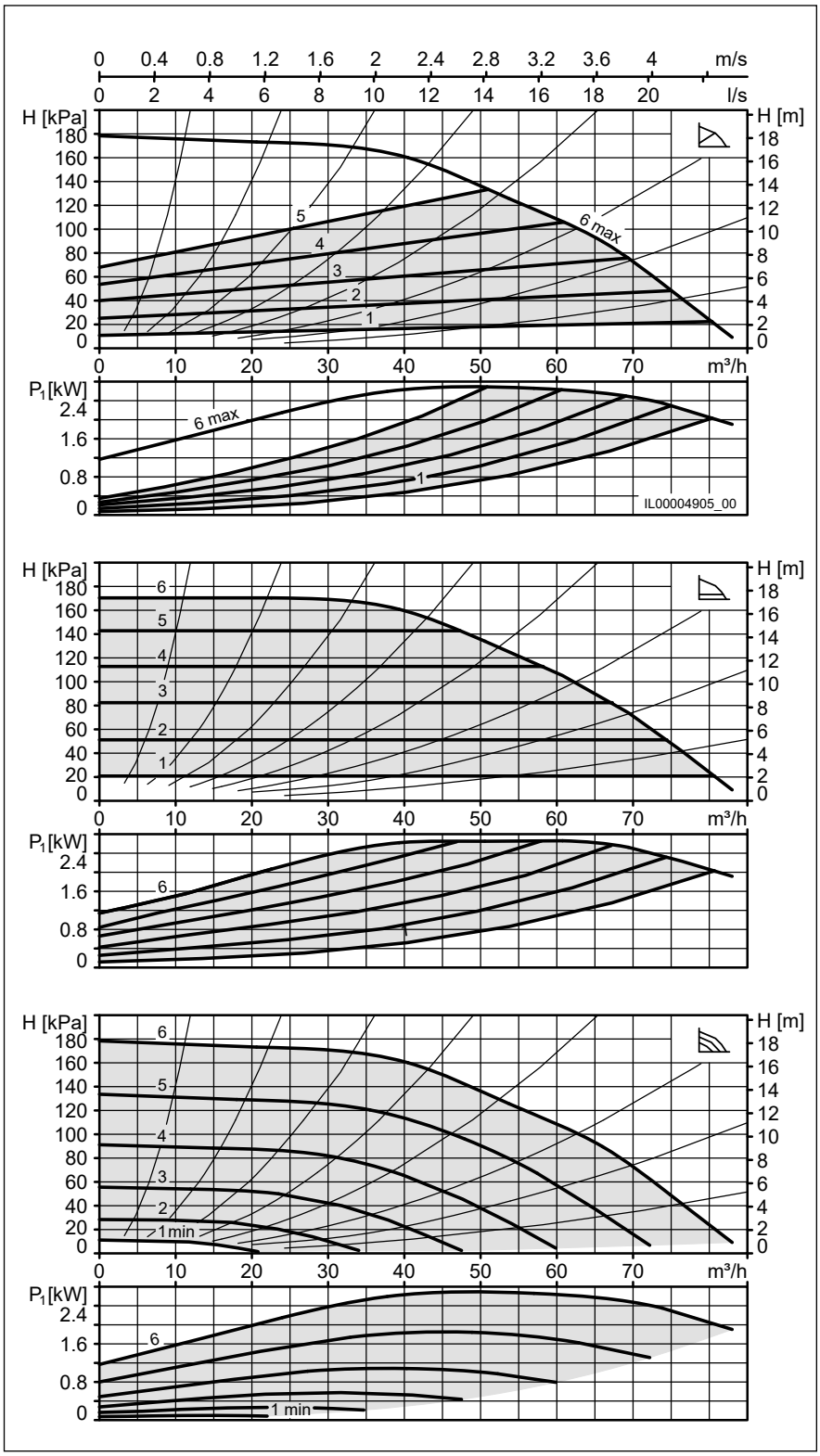

## VivarA S 80-18 360

| | |
|---|---|
| Minimum efficiency index (MEI) | ≥ 0.7 |
| Nominal width | DN 80 |
| Max. flow head H | 18 m |
| Overall length | 360 mm |
| Max. operating pressure | 16 bar |
| Media temperature | -20 °C…+140 °C |
| Ambient temperature | -20 °C…+40 °C |
| Net weight | 36 kg |

**Electrical data**

| | |
|---|---|
| Voltage | 3x400 V |
| Frequency | 50 Hz |
| Input power $P_1$ | 2.68 kW |
| Output power $P_2$ | 2.2 kW |
| Nominal current | 4.26 A |
| Speed | 4000 1/min |
| Motor protection | integrated |
| Protection rating | IP55 |
| Insulation class | F (155°C) |
| Motor efficiency class | IE5 |

**Required operating pressure at 500m a.s.l.**

| | |
|---|---|
| at a water temp. of 75 °C | 0.7 bar |
| at a water temp. of 95 °C | 1.2 bar |
| at a water temp. of 110 °C | 1.7 bar |
| for every ±100 m of altitude | 0.1 bar |

**Connction diagram**

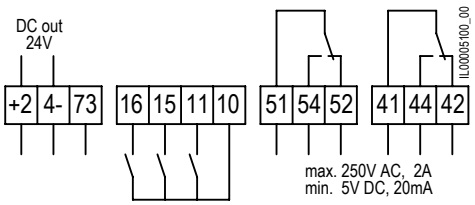


| | |
|---|---|
| **+24-** | 24 V DC out |
| **73** | Actual value input |
| **11,10** | External OFF or external ON (reversible) |
| **10,15** | Digital input minimum speed |
| **10,16** | Digital input maximum speed |
| **52, 54, 51** | Fault message or operating message |
| **42, 44, 41** | Operating or ready message |
| **L, N, PE** | Mains connection |

**Switch**

**1** Fault/operating message
**2** Operating/ready message
**3** External OFF or external ON

**Included in the scope of delivery**

– Sealing kit
– Screw kit

**Accessories**

– Biral Interface Modules
– Weld neck flange, pair PN10/16, DN80
– Intermediate piece DN80, PN16
– Sealing kits for flanges DN80, PN6 or PN16
– Base plate 235x235 KTL

| | **Art. no.** |
|---|---|
| VivarA S 80-18 360 | 7000000623 |

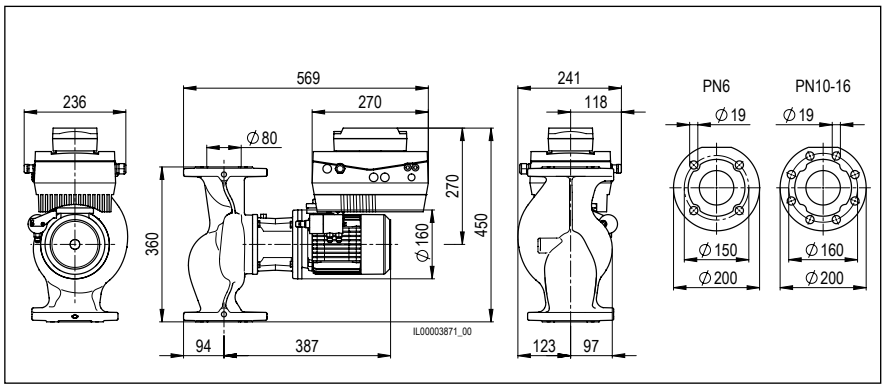


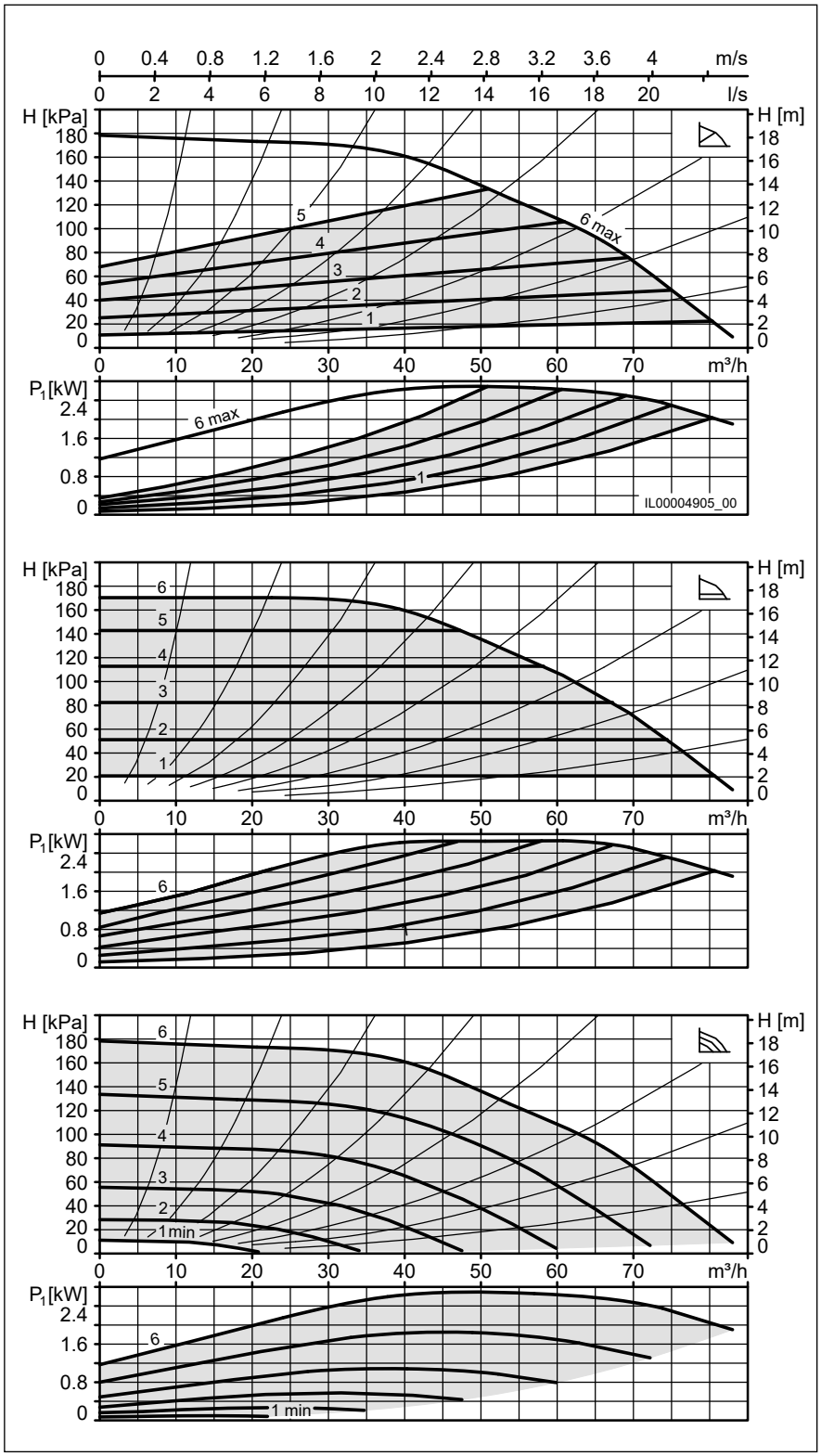




Datasheets

## VivarA M 80-18 360

| | |
|---|---|
| Minimum efficiency index (MEI) | ≥ 0.69 |
| Nominal width | DN 80 |
| Max. flow head H | 18 m |
| Overall length | 360 mm |
| Max. operating pressure | 16 bar |
| Media temperature | -20 °C…+140 °C |
| Ambient temperature | -20 °C…+40 °C |
| Net weight | 56 kg |

**Electrical data**

| | |
|---|---|
| Voltage | 3x400 V |
| Frequency | 50 Hz |
| Input power $P_1$ | 3.33 kW |
| Output power $P_2$ | 3 kW |
| Nominal current | 5.28 A |
| Speed | 3000 1/min |
| Motor protection | integrated |
| Protection rating | IP55 |
| Insulation class | F (155°C) |
| Motor efficiency class | IE5 |

**Required operating pressure at 500m a.s.l.**

| | |
|---|---|
| at a water temp. of 75 °C | 0.7 bar |
| at a water temp. of 95 °C | 1.2 bar |
| at a water temp. of 110 °C | 1.7 bar |
| for every ±100 m of altitude | 0.1 bar |

**Connction diagram**

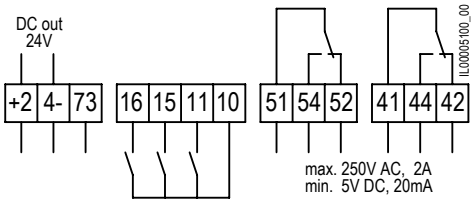


| | |
|---|---|
| **+24-** | 24 V DC out |
| **73** | Actual value input |
| **11,10** | External OFF or external ON (reversible) |
| **10,15** | Digital input minimum speed |
| **10,16** | Digital input maximum speed |
| **52, 54, 51** | Fault message or operating message |
| **42, 44, 41** | Operating or ready message |
| **L, N, PE** | Mains connection |

**Switch**

**1** Fault/operating message
**2** Operating/ready message
**3** External OFF or external ON

**Included in the scope of delivery**

– Sealing kit
– Screw kit

**Accessories**

– Biral Interface Modules
– Weld neck flange, pair PN10/16, DN80
– Intermediate piece DN80, PN16
– Sealing kits for flanges DN80, PN6 or PN16
– Base plate 235x235 KTL

| | **Art. no.** |
|---|---|
| VivarA M 80-18 360 | 7000000644 |

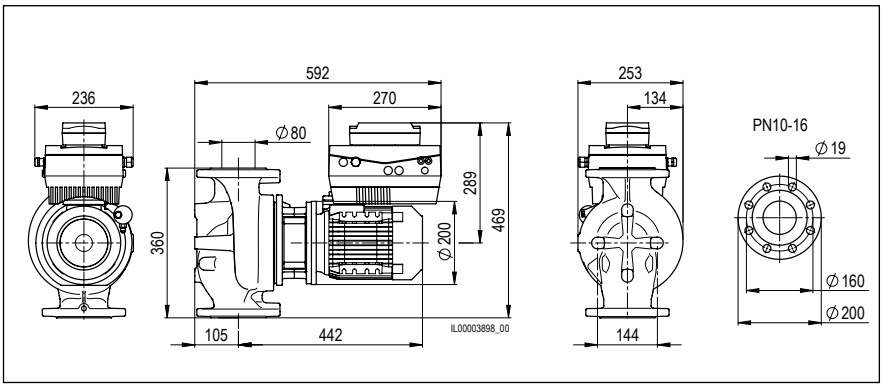


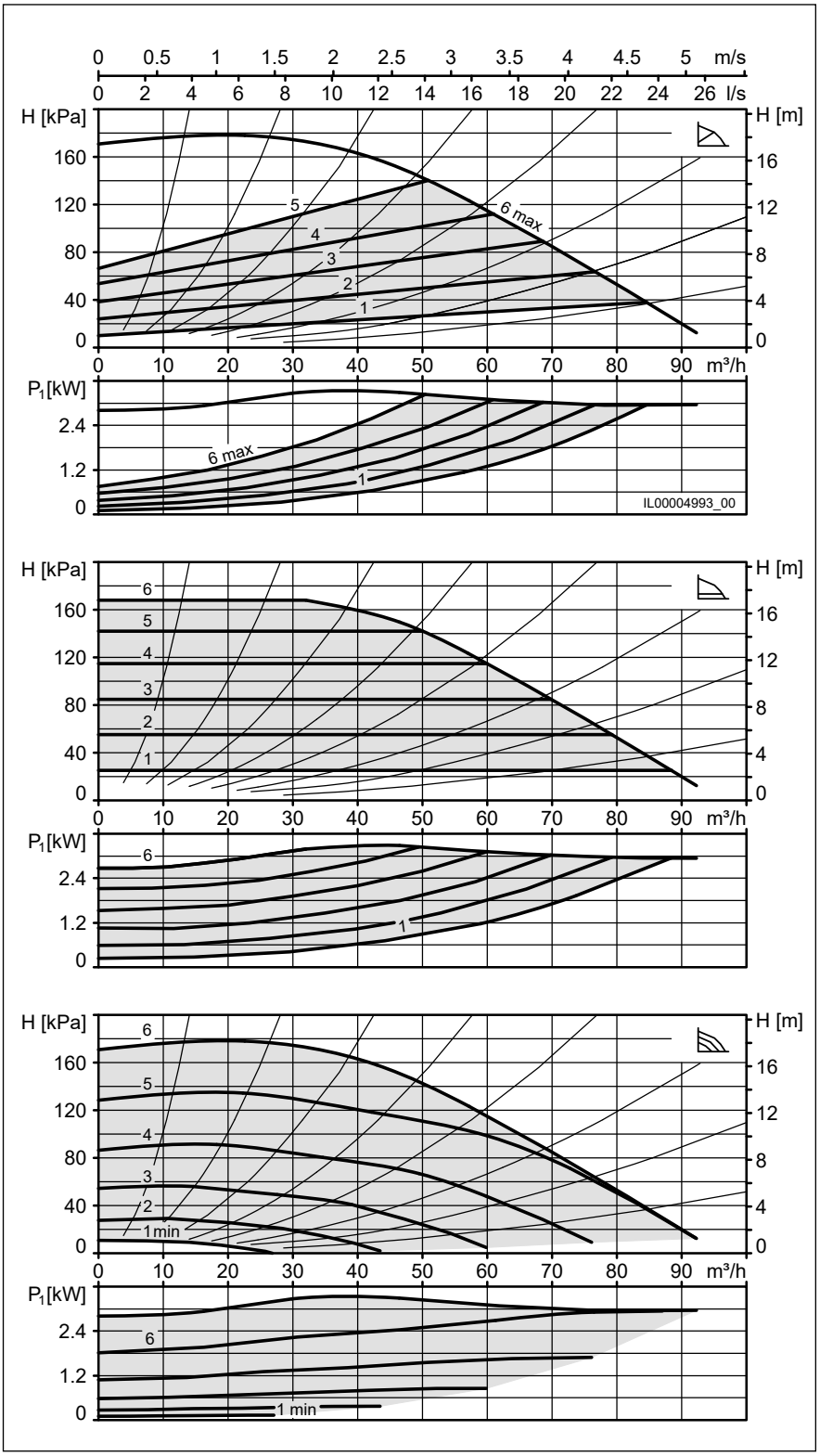

## VivarA M 80-21 360

| | |
|---|---|
| Minimum efficiency index (MEI) | ≥ 0.69 |
| Nominal width | DN 80 |
| Max. flow head H | 21 m |
| Overall length | 360 mm |
| Max. operating pressure | 16 bar |
| Media temperature | -20 °C…+140 °C |
| Ambient temperature | -20 °C…+40 °C |
| Net weight | 57 kg |

**Electrical data**

| | |
|---|---|
| Voltage | 3x400 V |
| Frequency | 50 Hz |
| Input power $P_1$ | 4.4 kW |
| Output power $P_2$ | 4 kW |
| Nominal current | 6.94 A |
| Speed | 3000 1/min |
| Motor protection | integrated |
| Protection rating | IP55 |
| Insulation class | F (155°C) |
| Motor efficiency class | IE5 |

**Required operating pressure at 500m a.s.l.**

| | |
|---|---|
| at a water temp. of 75 °C | 0.7 bar |
| at a water temp. of 95 °C | 1.2 bar |
| at a water temp. of 110 °C | 1.7 bar |
| for every ±100 m of altitude | 0.1 bar |

**Connction diagram**

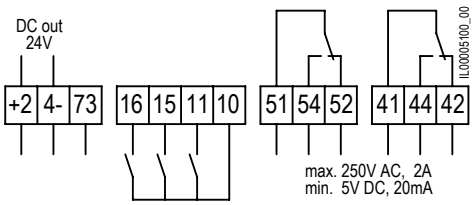


| | |
|---|---|
| **+24-** | 24 V DC out |
| **73** | Actual value input |
| **11,10** | External OFF or external ON (reversible) |
| **10,15** | Digital input minimum speed |
| **10,16** | Digital input maximum speed |
| **52, 54, 51** | Fault message or operating message |
| **42, 44, 41** | Operating or ready message |
| **L, N, PE** | Mains connection |

**Switch**

**1** Fault/operating message
**2** Operating/ready message
**3** External OFF or external ON

**Included in the scope of delivery**

– Sealing kit
– Screw kit

**Accessories**

– Biral Interface Modules
– Weld neck flange, pair PN10/16, DN80
– Intermediate piece DN80, PN16
– Sealing kits for flanges DN80, PN6 or PN16
– Base plate 235x235 KTL

| | **Art. no.** |
|---|---|
| VivarA M 80-21 360 | 7000000645 |

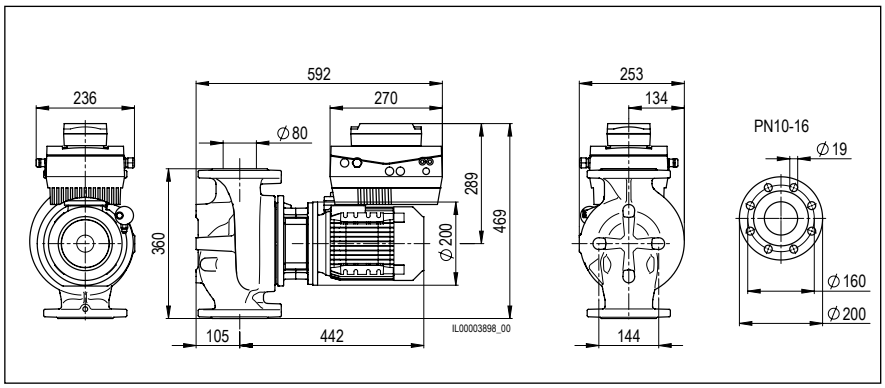


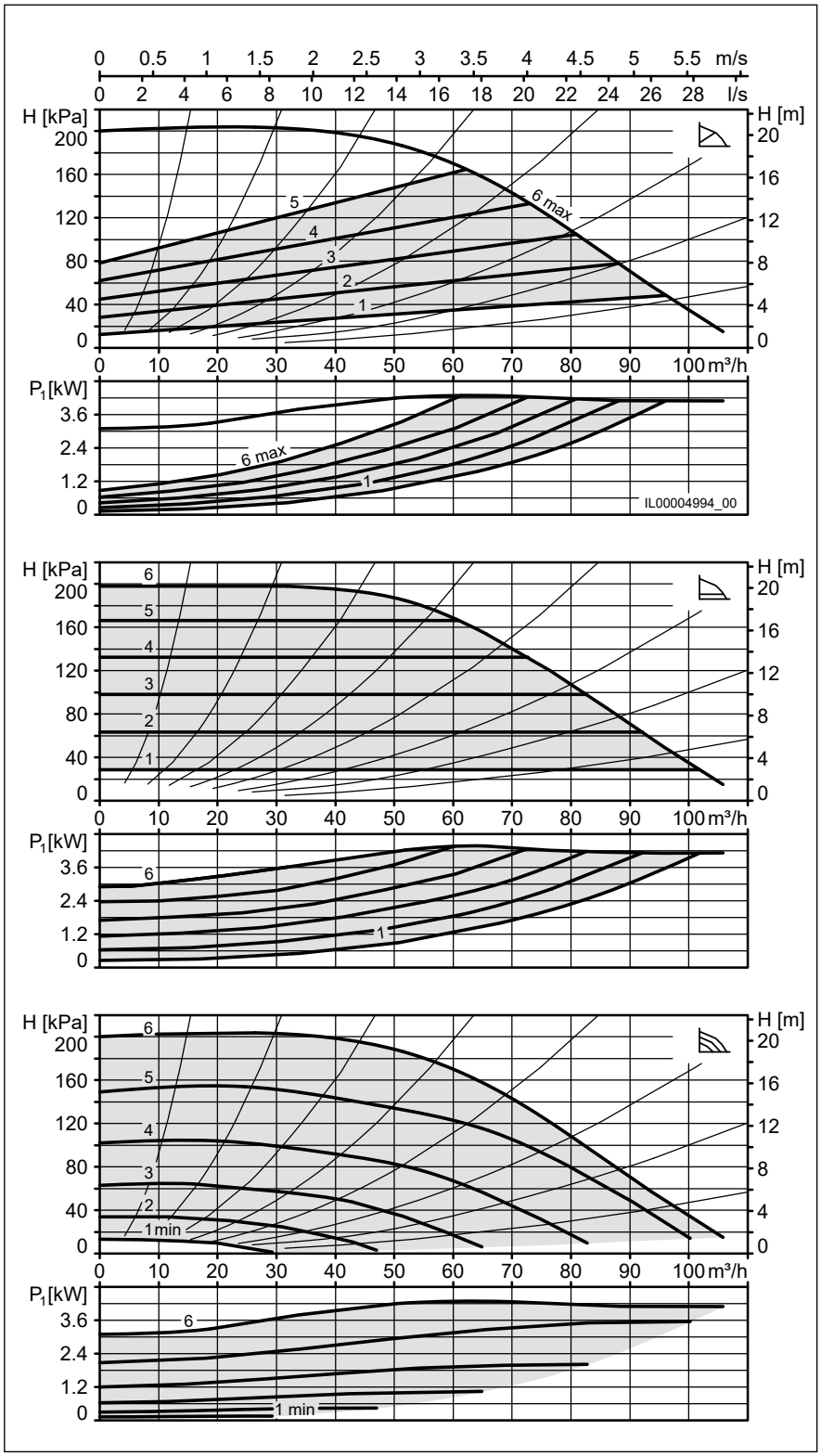

## VivarA M 80-24 360

| | |
|---|---|
| Minimum efficiency index (MEI) | ≥ 0.69 |
| Nominal width | DN 80 |
| Max. flow head H | 24 m |
| Overall length | 360 mm |
| Max. operating pressure | 16 bar |
| Media temperature | -20 °C…+140 °C |
| Ambient temperature | -20 °C…+40 °C |
| Net weight | 63 kg |

**Electrical data**

| | |
|---|---|
| Voltage | 3x400 V |
| Frequency | 50 Hz |
| Input power $P_1$ | 6.19 kW |
| Output power $P_2$ | 5.5 kW |
| Nominal current | 9.82 A |
| Speed | 3000 1/min |
| Motor protection | integrated |
| Protection rating | IP55 |
| Insulation class | F (155°C) |
| Motor efficiency class | IE5 |

**Required operating pressure at 500m a.s.l.**

| | |
|---|---|
| at a water temp. of 75 °C | 0.7 bar |
| at a water temp. of 95 °C | 1.2 bar |
| at a water temp. of 110 °C | 1.7 bar |
| for every ±100 m of altitude | 0.1 bar |

**Connction diagram**

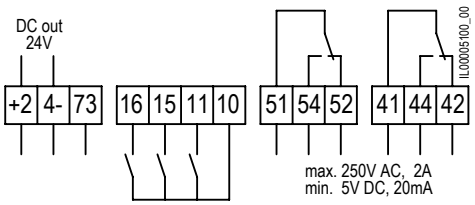


| | |
|---|---|
| **+24-** | 24 V DC out |
| **73** | Actual value input |
| **11,10** | External OFF or external ON (reversible) |
| **10,15** | Digital input minimum speed |
| **10,16** | Digital input maximum speed |
| **52, 54, 51** | Fault message or operating message |
| **42, 44, 41** | Operating or ready message |
| **L, N, PE** | Mains connection |

**Switch**

**1** Fault/operating message
**2** Operating/ready message
**3** External OFF or external ON

**Included in the scope of delivery**

– Sealing kit
– Screw kit

**Accessories**

– Biral Interface Modules
– Weld neck flange, pair PN10/16, DN80
– Intermediate piece DN80, PN16
– Sealing kits for flanges DN80, PN6 or PN16
– Base plate 235x235 KTL

| | **Art. no.** |
|---|---|
| VivarA M 80-24 360 | 7000000646 |

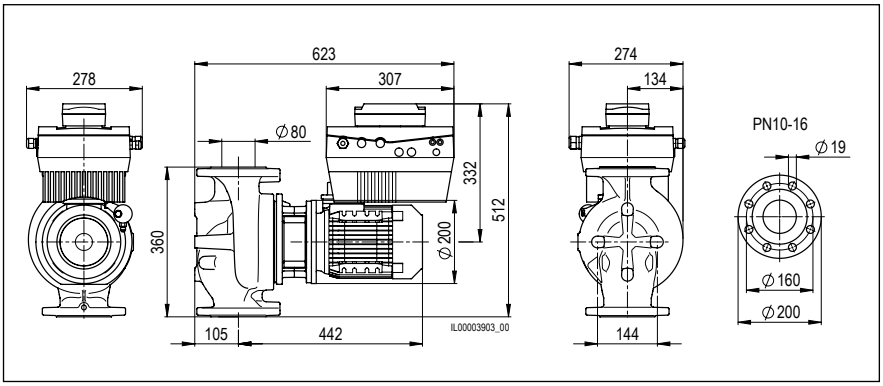


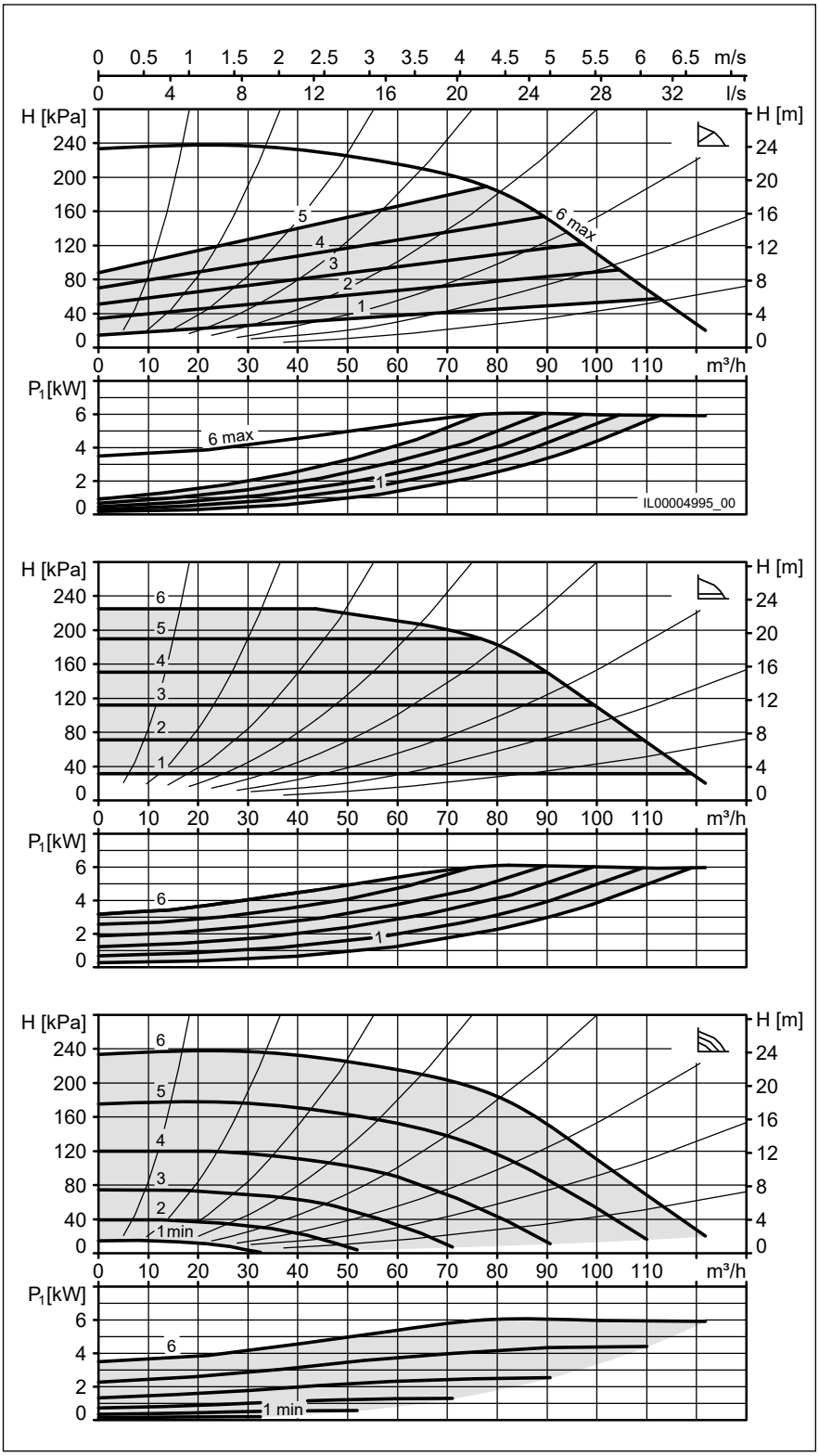

## VivarA M 80-25 440

| | |
|---|---|
| Minimum efficiency index (MEI) | ≥ 0.68 |
| Nominal width | DN 80 |
| Max. flow head H | 25 m |
| Overall length | 440 mm |
| Max. operating pressure | 16 bar |
| Media temperature | -20 °C…+140 °C |
| Ambient temperature | -20 °C…+40 °C |
| Net weight | 81 kg |

**Electrical data**

| | |
|---|---|
| Voltage | 3x400 V |
| Frequency | 50 Hz |
| Input power $P_1$ | 7.7 kW |
| Output power $P_2$ | 7.5 kW |
| Nominal current | 12.38 A |
| Speed | 3000 1/min |
| Motor protection | integrated |
| Protection rating | IP55 |
| Insulation class | F (155°C) |
| Motor efficiency class | IE5 |

**Required operating pressure at 500m a.s.l.**

| | |
|---|---|
| at a water temp. of 75 °C | 0.7 bar |
| at a water temp. of 95 °C | 1.2 bar |
| at a water temp. of 110 °C | 1.7 bar |
| for every ±100 m of altitude | 0.1 bar |

**Connction diagram**

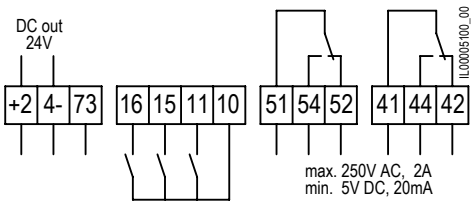


| | |
|---|---|
| **+24-** | 24 V DC out |
| **73** | Actual value input |
| **11,10** | External OFF or external ON (reversible) |
| **10,15** | Digital input minimum speed |
| **10,16** | Digital input maximum speed |
| **52, 54, 51** | Fault message or operating message |
| **42, 44, 41** | Operating or ready message |
| **L, N, PE** | Mains connection |

**Switch**

**1** Fault/operating message
**2** Operating/ready message
**3** External OFF or external ON

**Included in the scope of delivery**

– Sealing kit
– Screw kit

**Accessories**

– Biral Interface Modules
– Weld neck flange, pair PN10/16, DN80
– Intermediate piece DN80, PN16
– Sealing kits for flanges DN80, PN6 or PN16
– Base plate 235x235 KTL

| | **Art. no.** |
|---|---|
| VivarA M 80-25 440 | 7000000647 |

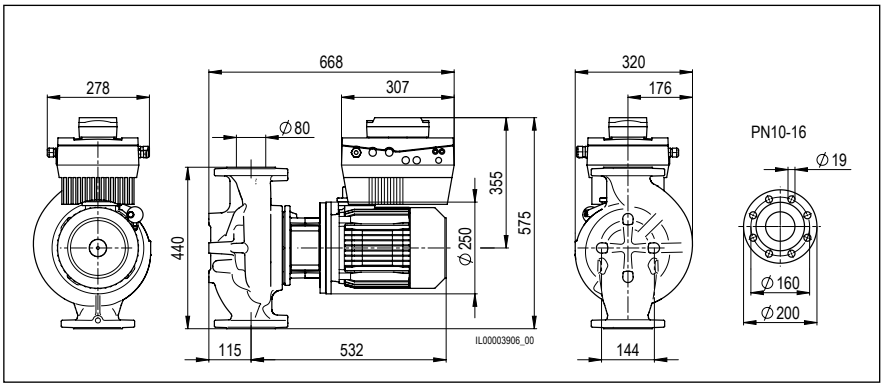


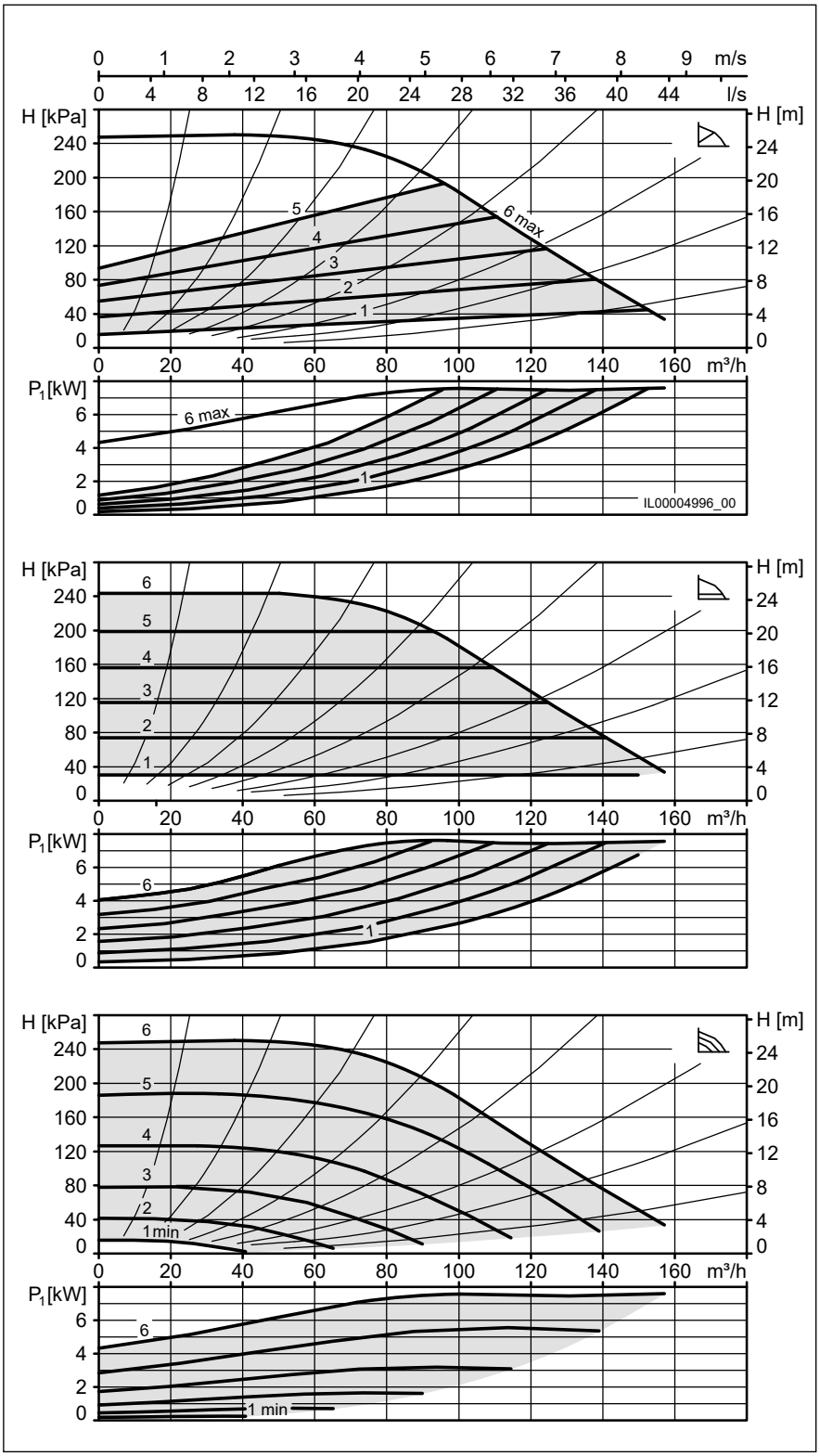

## VivarA M 80-33 440

| | |
|---|---|
| Minimum efficiency index (MEI) | ≥ 0.68 |
| Nominal width | DN 80 |
| Max. flow head H | 33 m |
| Overall length | 440 mm |
| Max. operating pressure | 16 bar |
| Media temperature | -20 °C…+140 °C |
| Ambient temperature | -20 °C…+40 °C |
| Net weight | 101 kg |

**Electrical data**

| | |
|---|---|
| Voltage | 3x400 V |
| Frequency | 50 Hz |
| Input power $P_1$ | 11.93 kW |
| Output power $P_2$ | 11 kW |
| Nominal current | 19.15 A |
| Speed | 3000 1/min |
| Motor protection | integrated |
| Protection rating | IP55 |
| Insulation class | F (155°C) |
| Motor efficiency class | IE5 |

**Required operating pressure at 500m a.s.l.**

| | |
|---|---|
| at a water temp. of 75 °C | 0.7 bar |
| at a water temp. of 95 °C | 1.2 bar |
| at a water temp. of 110 °C | 1.7 bar |
| for every ±100 m of altitude | 0.1 bar |

**Connction diagram**

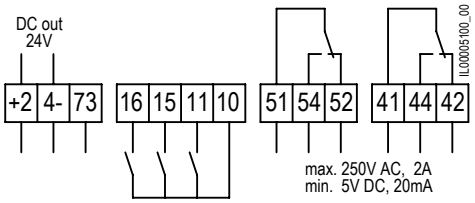


| | |
|---|---|
| **+24-** | 24 V DC out |
| **73** | Actual value input |
| **11,10** | External OFF or external ON (reversible) |
| **10,15** | Digital input minimum speed |
| **10,16** | Digital input maximum speed |
| **52, 54, 51** | Fault message or operating message |
| **42, 44, 41** | Operating or ready message |
| **L, N, PE** | Mains connection |

**Switch**

**1** Fault/operating message
**2** Operating/ready message
**3** External OFF or external ON

**Included in the scope of delivery**

– Sealing kit
– Screw kit

**Accessories**

– Biral Interface Modules
– Weld neck flange, pair PN10/16, DN80
– Intermediate piece DN80, PN16
– Sealing kits for flanges DN80, PN6 or PN16

| | **Art. no.** |
|---|---|
| VivarA M 80-33 440 | 7000000648 |

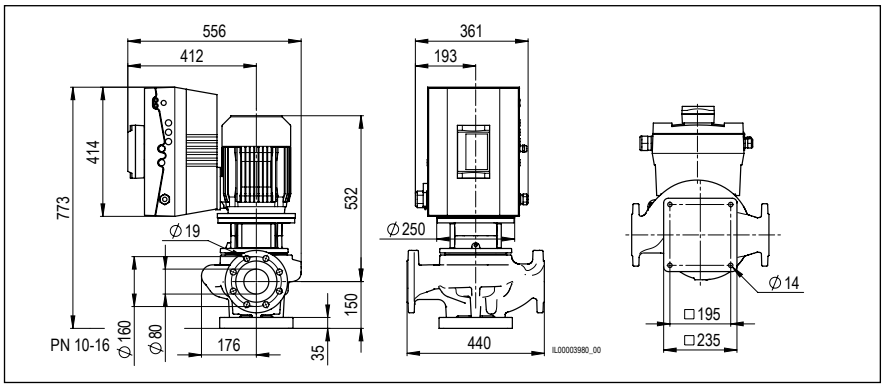


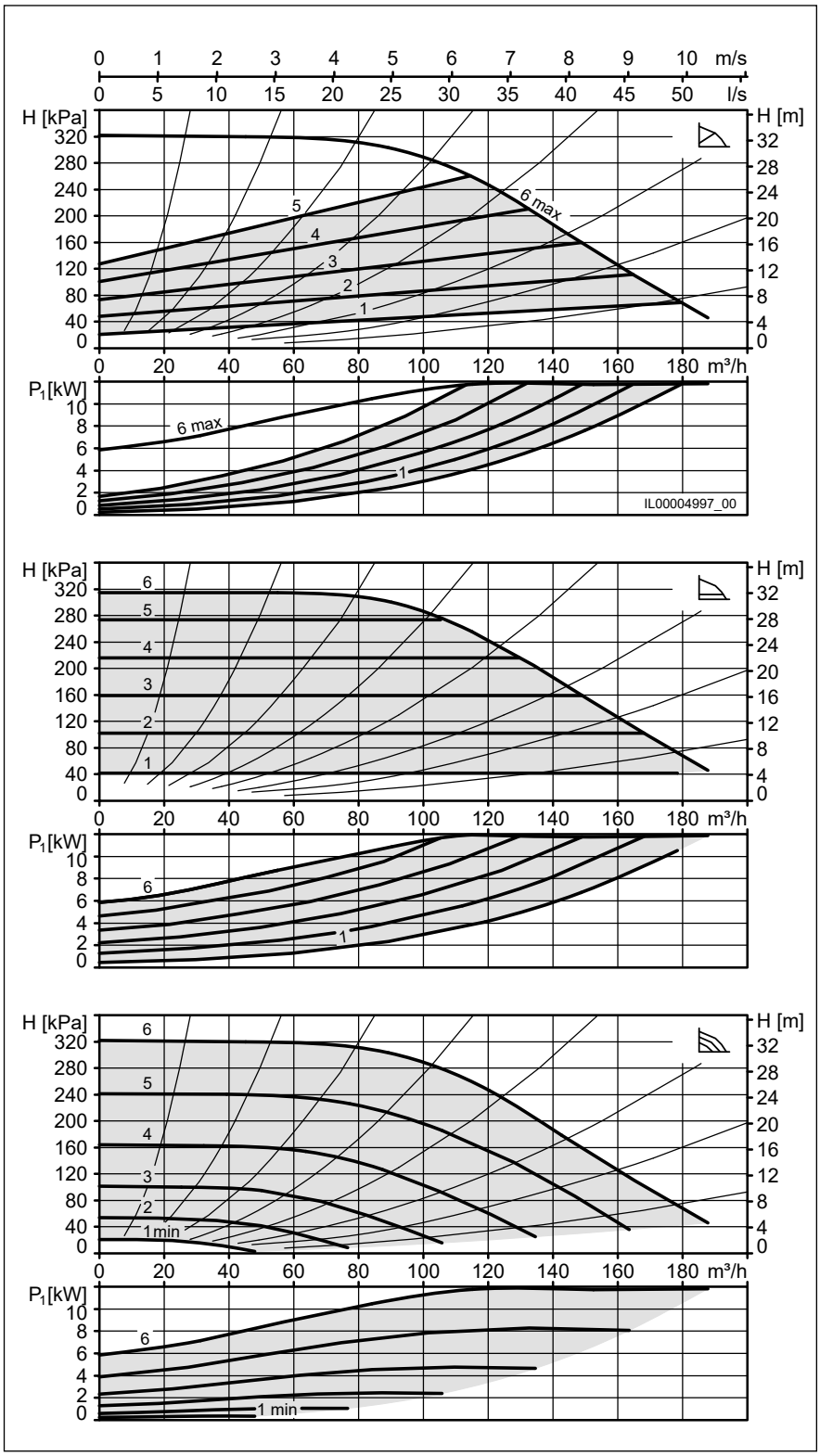

## VivarA M 80-33 440

| | |
|---|---|
| Minimum efficiency index (MEI) | ≥ 0.68 |
| Nominal width | DN 80 |
| Max. flow head H | 33 m |
| Overall length | 440 mm |
| Max. operating pressure | 16 bar |
| Media temperature | -20 °C…+140 °C |
| Ambient temperature | -20 °C…+40 °C |
| Net weight | 101 kg |

**Electrical data**

| | |
|---|---|
| Voltage | 3x400 V |
| Frequency | 50 Hz |
| Input power $P_1$ | 11.93 kW |
| Output power $P_2$ | 11 kW |
| Nominal current | 19.15 A |
| Speed | 3000 1/min |
| Motor protection | integrated |
| Protection rating | IP55 |
| Insulation class | F (155°C) |
| Motor efficiency class | IE5 |

**Required operating pressure at 500m a.s.l.**

| | |
|---|---|
| at a water temp. of 75 °C | 0.7 bar |
| at a water temp. of 95 °C | 1.2 bar |
| at a water temp. of 110 °C | 1.7 bar |
| for every ±100 m of altitude | 0.1 bar |

**Connction diagram**

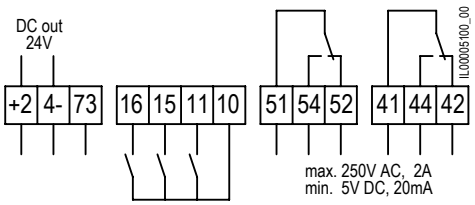


| | |
|---|---|
| **+24-** | 24 V DC out |
| **73** | Actual value input |
| **11,10** | External OFF or external ON (reversible) |
| **10,15** | Digital input minimum speed |
| **10,16** | Digital input maximum speed |
| **52, 54, 51** | Fault message or operating message |
| **42, 44, 41** | Operating or ready message |
| **L, N, PE** | Mains connection |

**Switch**

**1** Fault/operating message
**2** Operating/ready message
**3** External OFF or external ON

**Included in the scope of delivery**

– Sealing kit
– Screw kit

**Accessories**

– Biral Interface Modules
– Weld neck flange, pair PN10/16, DN80
– Intermediate piece DN80, PN16
– Sealing kits for flanges DN80, PN6 or PN16

| | **Art. no.** |
|---|---|
| VivarA M 80-33 440 | 7000000648 |

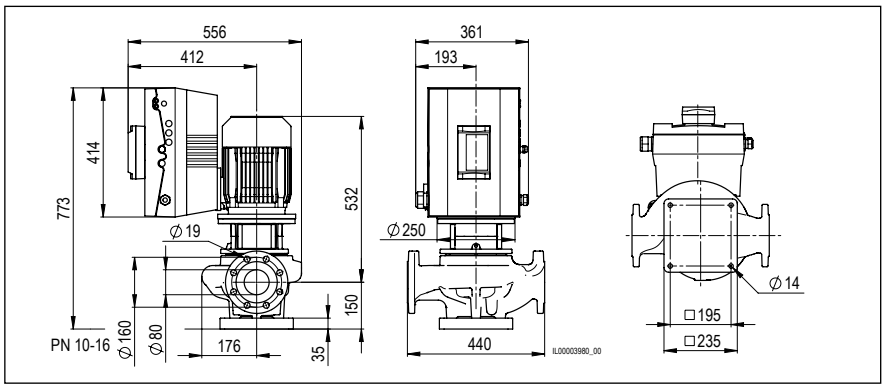


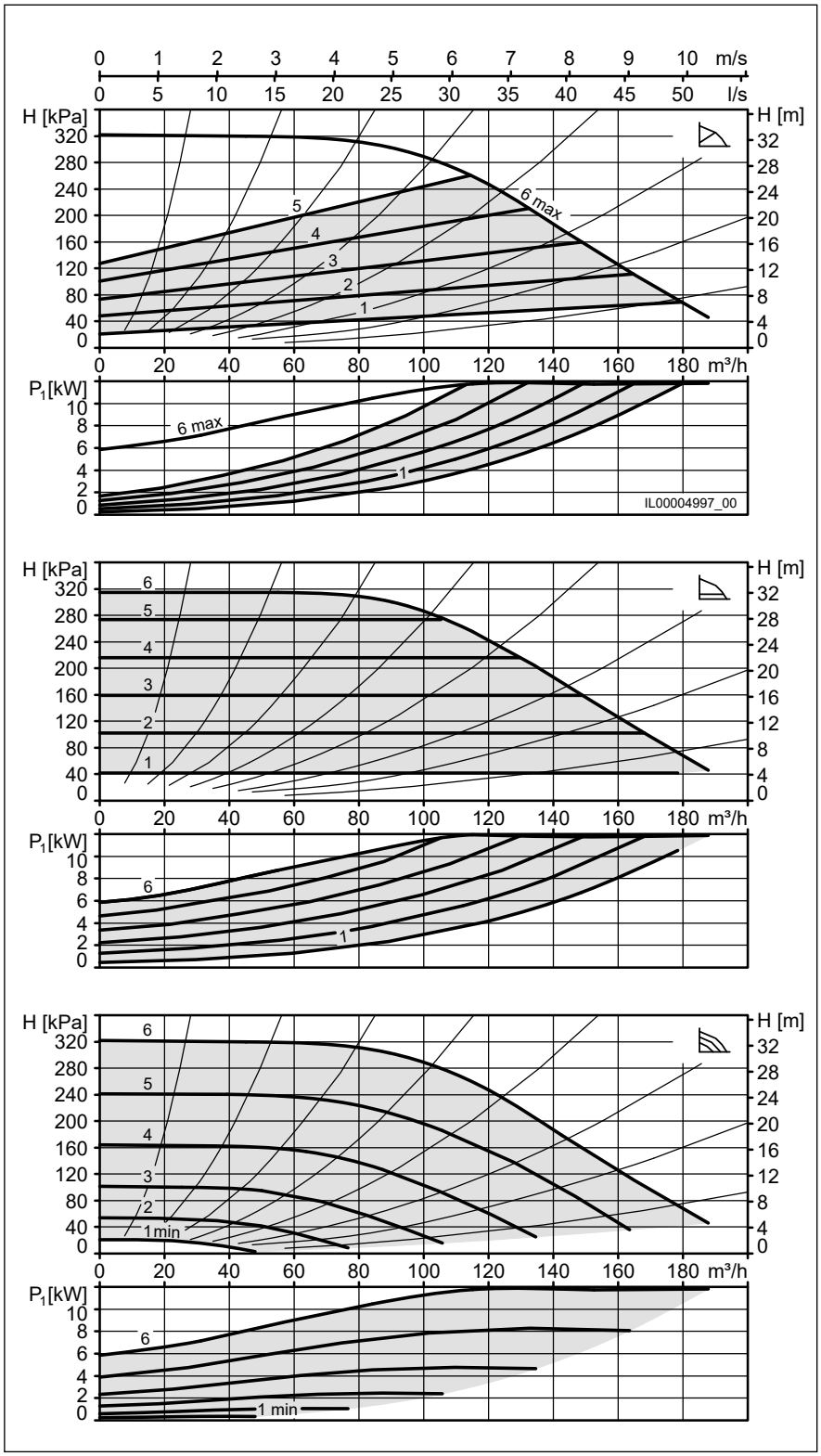

## VivarA M 80-40 440

| | |
|---|---|
| Minimum efficiency index (MEI) | ≥ 0.68 |
| Nominal width | DN 80 |
| Max. flow head H | 40 m |
| Overall length | 440 mm |
| Max. operating pressure | 16 bar |
| Media temperature | -20 °C…+140 °C |
| Ambient temperature | -20 °C…+40 °C |
| Net weight | 105 kg |

**Electrical data**

| | |
|---|---|
| Voltage | 3x400 V |
| Frequency | 50 Hz |
| Input power $P_1$ | 15.66 kW |
| Output power $P_2$ | 15 kW |
| Nominal current | 24.9 A |
| Speed | 3000 1/min |
| Motor protection | integrated |
| Protection rating | IP55 |
| Insulation class | F (155°C) |
| Motor efficiency class | IE5 |

**Required operating pressure at 500m a.s.l.**

| | |
|---|---|
| at a water temp. of 75 °C | 0.7 bar |
| at a water temp. of 95 °C | 1.2 bar |
| at a water temp. of 110 °C | 1.7 bar |
| for every ±100 m of altitude | 0.1 bar |

**Connction diagram**

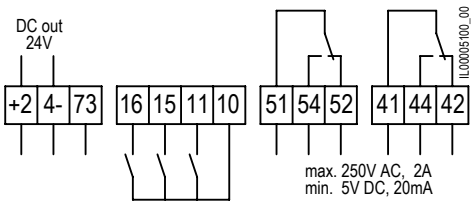


| | |
|---|---|
| **+24-** | 24 V DC out |
| **73** | Actual value input |
| **11,10** | External OFF or external ON (reversible) |
| **10,15** | Digital input minimum speed |
| **10,16** | Digital input maximum speed |
| **52, 54, 51** | Fault message or operating message |
| **42, 44, 41** | Operating or ready message |
| **L, N, PE** | Mains connection |

**Switch**

**1** Fault/operating message
**2** Operating/ready message
**3** External OFF or external ON

**Included in the scope of delivery**

– Sealing kit
– Screw kit

**Accessories**

– Biral Interface Modules
– Weld neck flange, pair PN10/16, DN80
– Intermediate piece DN80, PN16
– Sealing kits for flanges DN80, PN6 or PN16

| | **Art. no.** |
|---|---|
| VivarA M 80-40 440 | 7000000649 |

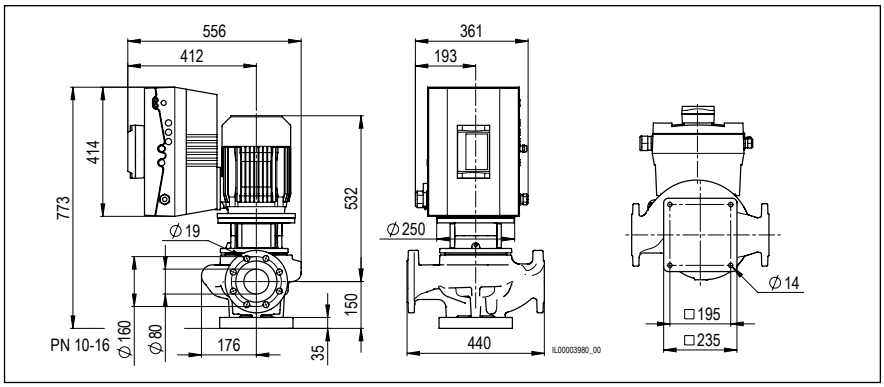


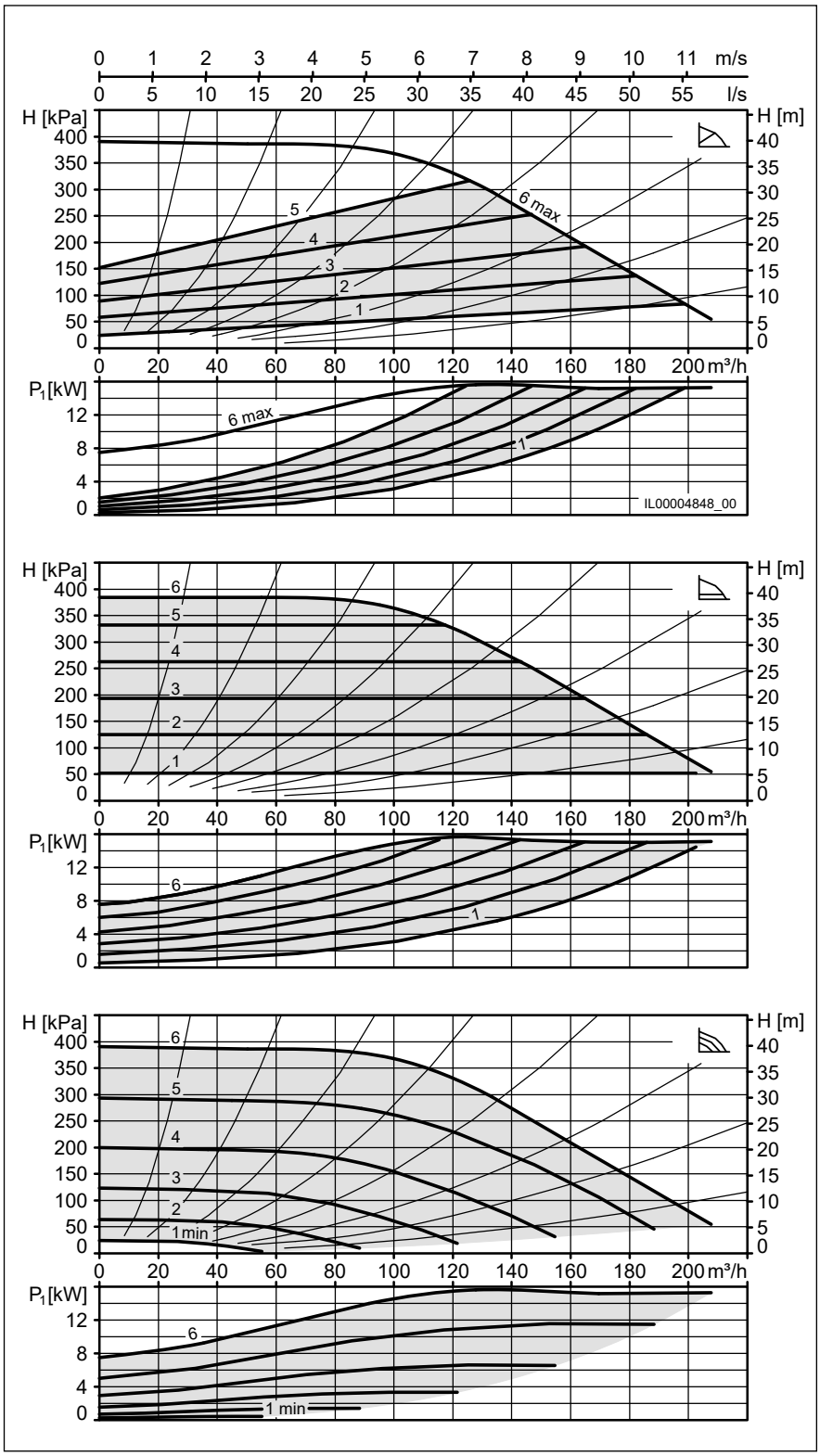

## VivarA S 100-12 450 PN6

| | |
|---|---|
| Minimum efficiency index (MEI) | ≥ 0.7 |
| Nominal width | DN 100 |
| Max. flow head H | 12 m |
| Overall length | 450 mm |
| Max. operating pressure | 6 bar |
| Media temperature | -20 °C…+140 °C |
| Ambient temperature | -20 °C…+40 °C |
| Net weight | 38 kg |

**Electrical data**

| | |
|---|---|
| Voltage | 3x400 V |
| Frequency | 50 Hz |
| Input power $P_1$ | 1.53 kW |
| Output power $P_2$ | 1.1 kW |
| Nominal current | 2.51 A |
| Speed | 4000 1/min |
| Motor protection | integrated |
| Protection rating | IP55 |
| Insulation class | F (155°C) |
| Motor efficiency class | IE5 |

**Required operating pressure at 500m a.s.l.**

| | |
|---|---|
| at a water temp. of 75 °C | 0.7 bar |
| at a water temp. of 95 °C | 1.2 bar |
| at a water temp. of 110 °C | 1.7 bar |
| for every ±100 m of altitude | 0.1 bar |

**Connction diagram**

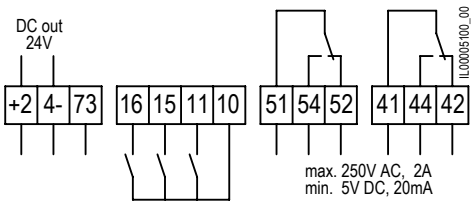


| | |
|---|---|
| **+24-** | 24 V DC out |
| **73** | Actual value input |
| **11,10** | External OFF or external ON (reversible) |
| **10,15** | Digital input minimum speed |
| **10,16** | Digital input maximum speed |
| **52, 54, 51** | Fault message or operating message |
| **42, 44, 41** | Operating or ready message |
| **L, N, PE** | Mains connection |

**Switch**

**1** Fault/operating message
**2** Operating/ready message
**3** External OFF or external ON

**Included in the scope of delivery**

– Sealing kit
– Screw kit

**Accessories**

– Biral Interface Modules
– Weld neck flange, pair PN10/16, DN100
– Sealing kits for flanges DN100, PN6 or PN16
– Base plate 235x235 KTL

| | **Art. no.** |
|---|---|
| VivarA S 100-12 450 PN6 | 7000000626 |

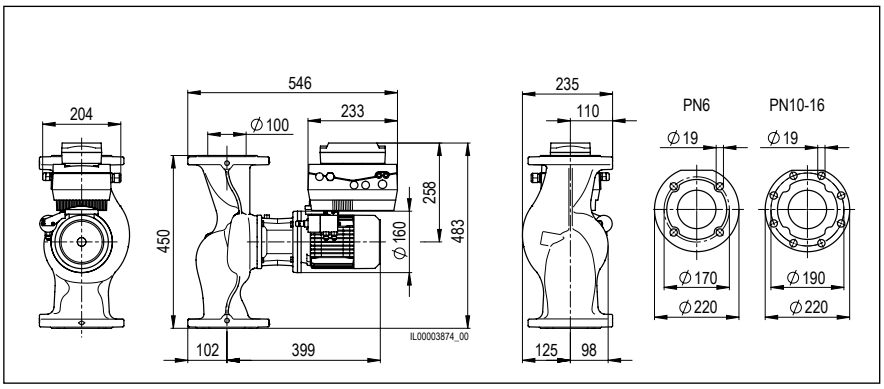


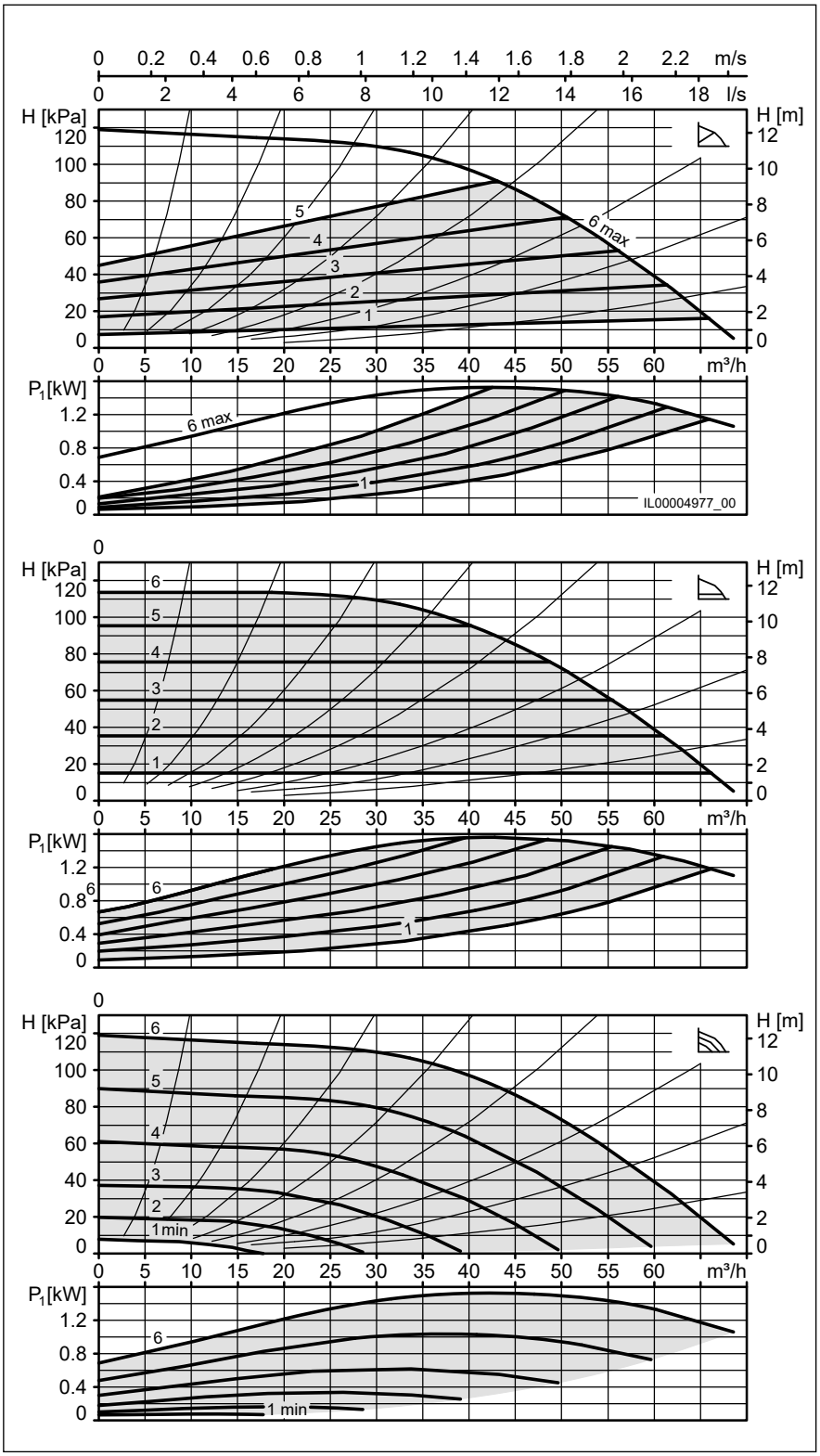

## VivarA S 100-12 450

| | |
|---|---|
| Minimum efficiency index (MEI) | ≥ 0.7 |
| Nominal width | DN 100 |
| Max. flow head H | 12 m |
| Overall length | 450 mm |
| Max. operating pressure | 16 bar |
| Media temperature | -20 °C…+140 °C |
| Ambient temperature | -20 °C…+40 °C |
| Net weight | 38 kg |

**Electrical data**

| | |
|---|---|
| Voltage | 3x400 V |
| Frequency | 50 Hz |
| Input power $P_1$ | 1.53 kW |
| Output power $P_2$ | 1.1 kW |
| Nominal current | 2.51 A |
| Speed | 4000 1/min |
| Motor protection | integrated |
| Protection rating | IP55 |
| Insulation class | F (155°C) |
| Motor efficiency class | IE5 |

**Required operating pressure at 500m a.s.l.**

| | |
|---|---|
| at a water temp. of 75 °C | 0.7 bar |
| at a water temp. of 95 °C | 1.2 bar |
| at a water temp. of 110 °C | 1.7 bar |
| for every ±100 m of altitude | 0.1 bar |

**Connction diagram**

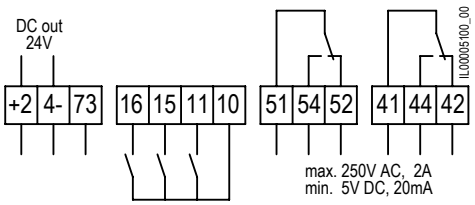


| | |
|---|---|
| **+24-** | 24 V DC out |
| **73** | Actual value input |
| **11,10** | External OFF or external ON (reversible) |
| **10,15** | Digital input minimum speed |
| **10,16** | Digital input maximum speed |
| **52, 54, 51** | Fault message or operating message |
| **42, 44, 41** | Operating or ready message |
| **L, N, PE** | Mains connection |

**Switch**

**1** Fault/operating message
**2** Operating/ready message
**3** External OFF or external ON

**Included in the scope of delivery**

– Sealing kit
– Screw kit

**Accessories**

– Biral Interface Modules
– Weld neck flange, pair PN10/16, DN100
– Sealing kits for flanges DN100, PN6 or PN16
– Base plate 235x235 KTL

| | **Art. no.** |
|---|---|
| VivarA S 100-12 450 | 7000000627 |

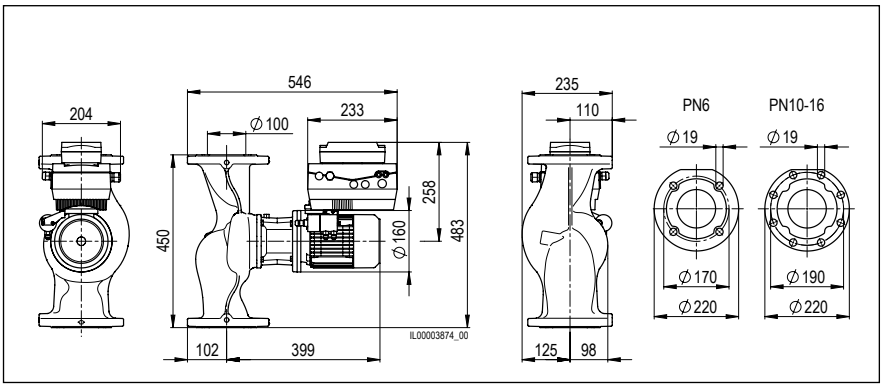


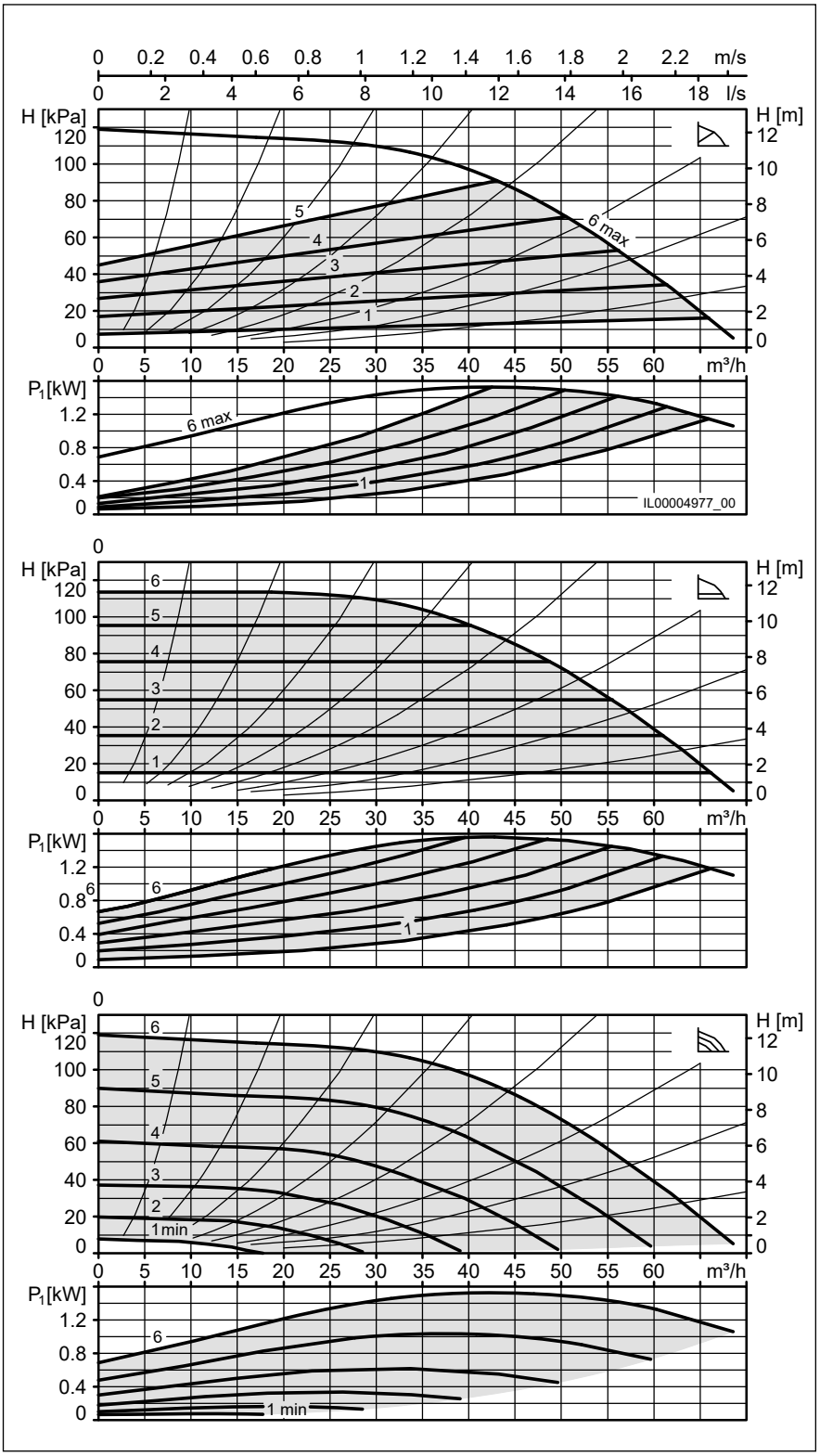

## VivarA S 100-15 450 PN6

| | |
|---|---|
| Minimum efficiency index (MEI) | ≥ 0.7 |
| Nominal width | DN 100 |
| Max. flow head H | 15 m |
| Overall length | 450 mm |
| Max. operating pressure | 6 bar |
| Media temperature | -20 °C…+140 °C |
| Ambient temperature | -20 °C…+40 °C |
| Net weight | 40 kg |

### Electrical data

| | |
|---|---|
| Voltage | 3x400 V |
| Frequency | 50 Hz |
| Input power $P_1$ | 2.12 kW |
| Output power $P_2$ | 1.5 kW |
| Nominal current | 3.55 A |
| Speed | 4000 1/min |
| Motor protection | integrated |
| Protection rating | IP55 |
| Insulation class | F (155°C) |
| Motor efficiency class | IE5 |

### Required operating pressure at 500m a.s.l.

| | |
|---|---|
| at a water temp. of 75 °C | 0.7 bar |
| at a water temp. of 95 °C | 1.2 bar |
| at a water temp. of 110 °C | 1.7 bar |
| for every ±100 m of altitude | 0.1 bar |

### Connction diagram

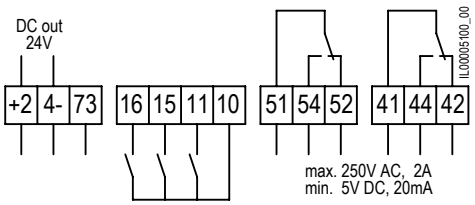


| | |
|---|---|
| **+24-** | 24 V DC out |
| **73** | Actual value input |
| **11,10** | External OFF or external ON (reversible) |
| **10,15** | Digital input minimum speed |
| **10,16** | Digital input maximum speed |
| **52, 54, 51** | Fault message or operating message |
| **42, 44, 41** | Operating or ready message |
| **L, N, PE** | Mains connection |

### Switch

**1** Fault/operating message
**2** Operating/ready message
**3** External OFF or external ON

### Included in the scope of delivery

– Sealing kit
– Screw kit

### Accessories

– Biral Interface Modules
– Weld neck flange, pair PN10/16, DN100
– Sealing kits for flanges DN100, PN6 or PN16
– Base plate 235x235 KTL

| | Art. no. |
|---|---|
| VivarA S 100-15 450 PN6 | 7000000628 |

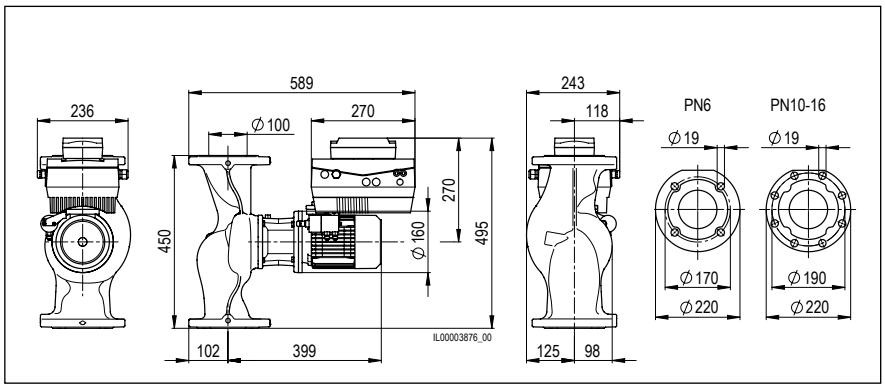


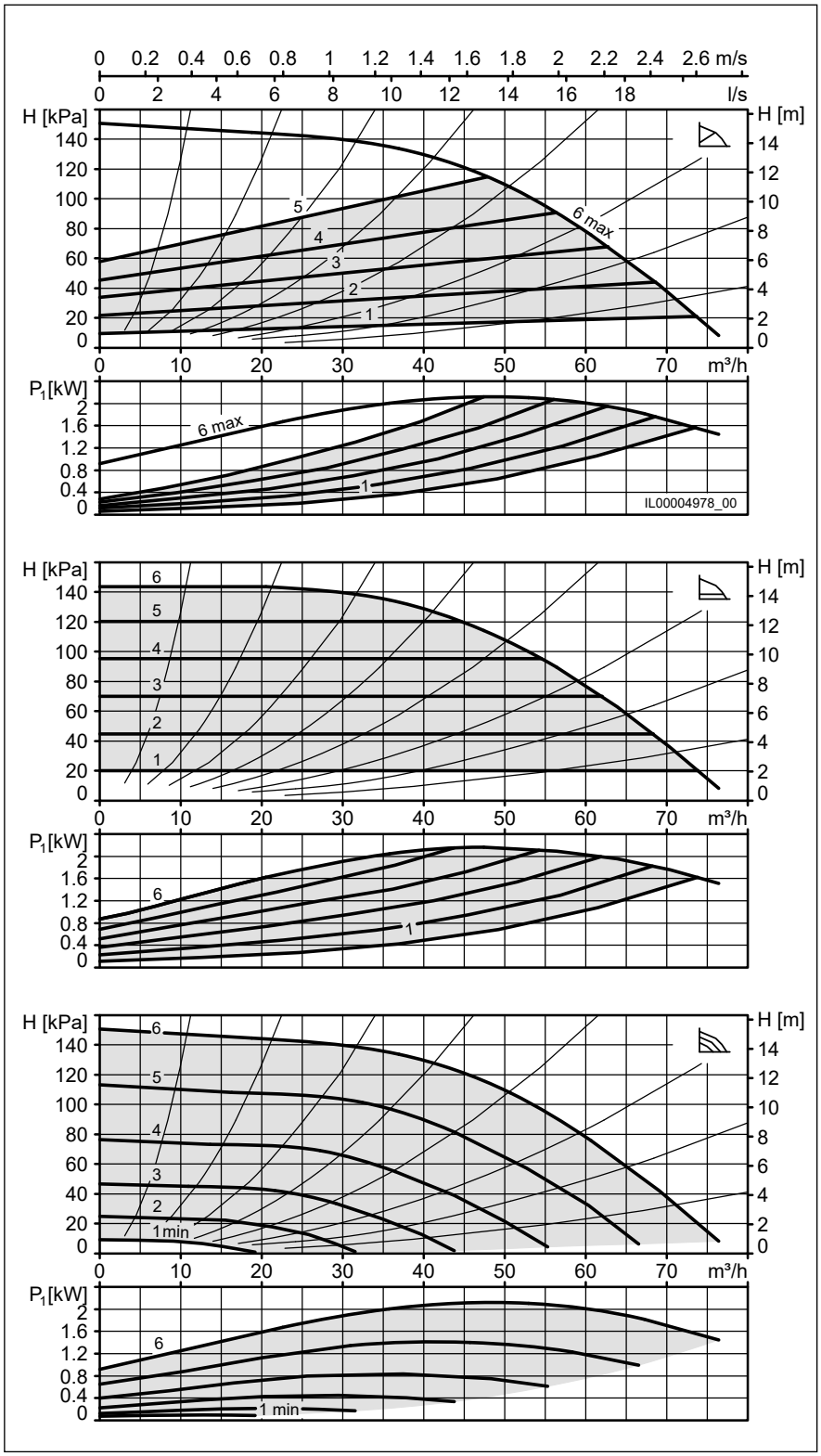




Datasheets

## VivarA S 100-15 450

| | |
|---|---|
| Minimum efficiency index (MEI) | ≥ 0.7 |
| Nominal width | DN 100 |
| Max. flow head H | 15 m |
| Overall length | 450 mm |
| Max. operating pressure | 16 bar |
| Media temperature | -20 °C…+140 °C |
| Ambient temperature | -20 °C…+40 °C |
| Net weight | 40 kg |

**Electrical data**

| | |
|---|---|
| Voltage | 3x400 V |
| Frequency | 50 Hz |
| Input power $P_1$ | 2.12 kW |
| Output power $P_2$ | 1.5 kW |
| Nominal current | 3.55 A |
| Speed | 4000 1/min |
| Motor protection | integrated |
| Protection rating | IP55 |
| Insulation class | F (155°C) |
| Motor efficiency class | IE5 |

**Required operating pressure at 500m a.s.l.**

| | |
|---|---|
| at a water temp. of 75 °C | 0.7 bar |
| at a water temp. of 95 °C | 1.2 bar |
| at a water temp. of 110 °C | 1.7 bar |
| for every ±100 m of altitude | 0.1 bar |

**Connction diagram**

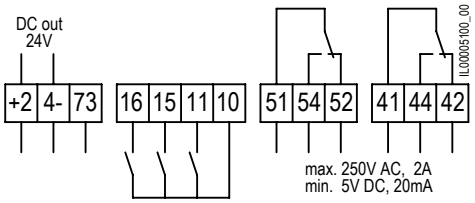


| | |
|---|---|
| **+24-** | 24 V DC out |
| **73** | Actual value input |
| **11,10** | External OFF or external ON (reversible) |
| **10,15** | Digital input minimum speed |
| **10,16** | Digital input maximum speed |
| **52, 54, 51** | Fault message or operating message |
| **42, 44, 41** | Operating or ready message |
| **L, N, PE** | Mains connection |

**Switch**

**1** Fault/operating message
**2** Operating/ready message
**3** External OFF or external ON

**Included in the scope of delivery**

– Sealing kit
– Screw kit

**Accessories**

– Biral Interface Modules
– Weld neck flange, pair PN10/16, DN100
– Sealing kits for flanges DN100, PN6 or PN16
– Base plate 235x235 KTL

| | **Art. no.** |
|---|---|
| VivarA S 100-15 450 | 7000000629 |

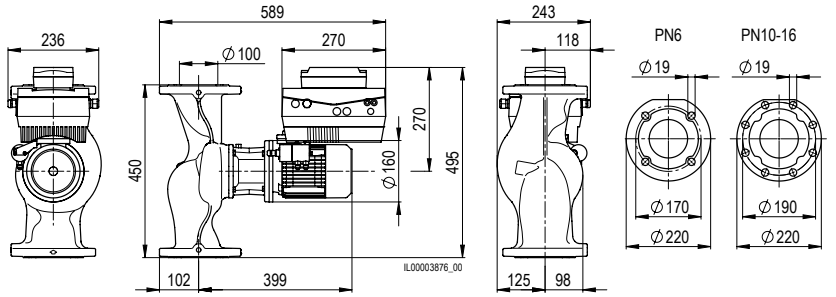


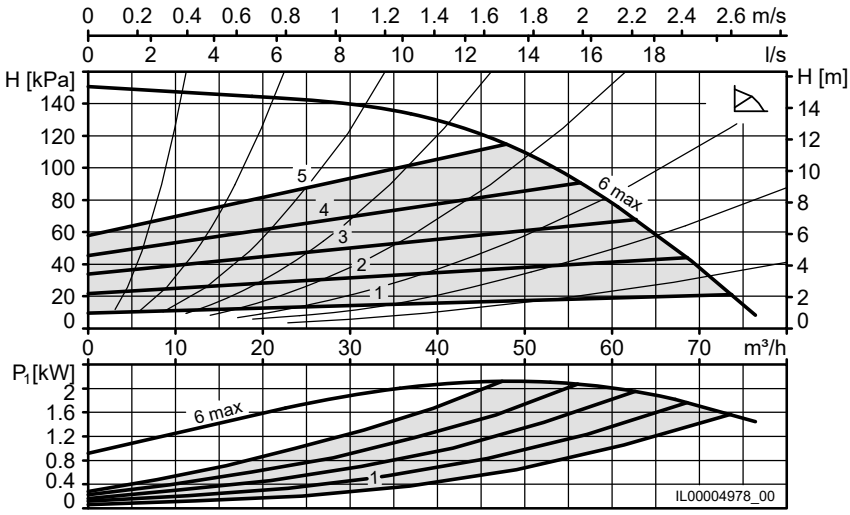


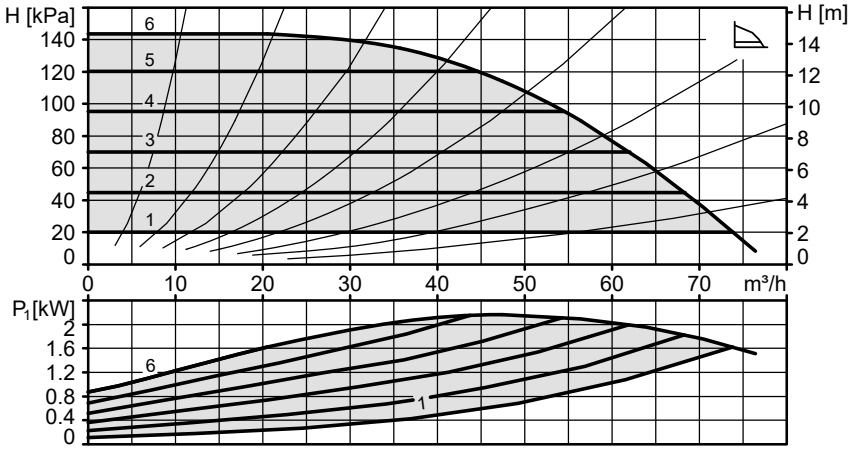


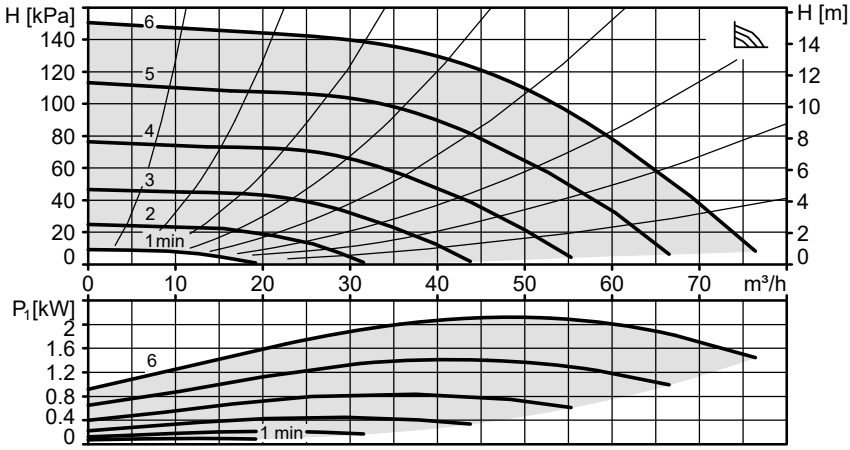

## VivarA S 100-18 450 PN6

| | |
|---|---|
| Minimum efficiency index (MEI) | ≥ 0.7 |
| Nominal width | DN 100 |
| Max. flow head H | 18 m |
| Overall length | 450 mm |
| Max. operating pressure | 6 bar |
| Media temperature | -20 °C…+140 °C |
| Ambient temperature | -20 °C…+40 °C |
| Net weight | 40 kg |

### Electrical data

| | |
|---|---|
| Voltage | 3x400 V |
| Frequency | 50 Hz |
| Input power $P_1$ | 2.68 kW |
| Output power $P_2$ | 2.2 kW |
| Nominal current | 4.33 A |
| Speed | 4000 1/min |
| Motor protection | integrated |
| Protection rating | IP55 |
| Insulation class | F (155°C) |
| Motor efficiency class | IE5 |

### Required operating pressure at 500m a.s.l.

| | |
|---|---|
| at a water temp. of 75 °C | 0.7 bar |
| at a water temp. of 95 °C | 1.2 bar |
| at a water temp. of 110 °C | 1.7 bar |
| for every ±100 m of altitude | 0.1 bar |

### Connction diagram

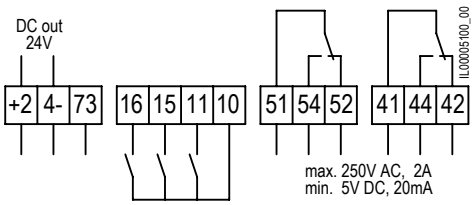


| | |
|---|---|
| **+24-** | 24 V DC out |
| **73** | Actual value input |
| **11,10** | External OFF or external ON (reversible) |
| **10,15** | Digital input minimum speed |
| **10,16** | Digital input maximum speed |
| **52, 54, 51** | Fault message or operating message |
| **42, 44, 41** | Operating or ready message |
| **L, N, PE** | Mains connection |

### Switch

**1** Fault/operating message
**2** Operating/ready message
**3** External OFF or external ON

### Included in the scope of delivery

– Sealing kit
– Screw kit

### Accessories

– Biral Interface Modules
– Weld neck flange, pair PN10/16, DN100
– Sealing kits for flanges DN100, PN6 or PN16
– Base plate 235x235 KTL

| | Art. no. |
|---|---|
| VivarA S 100-18 450 PN6 | 7000000630 |

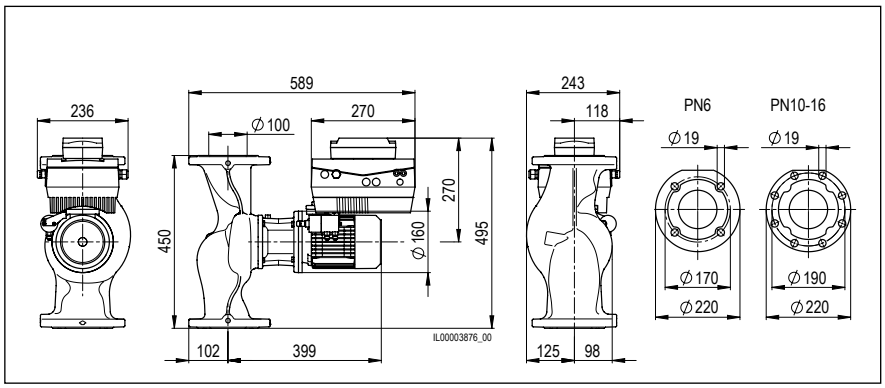


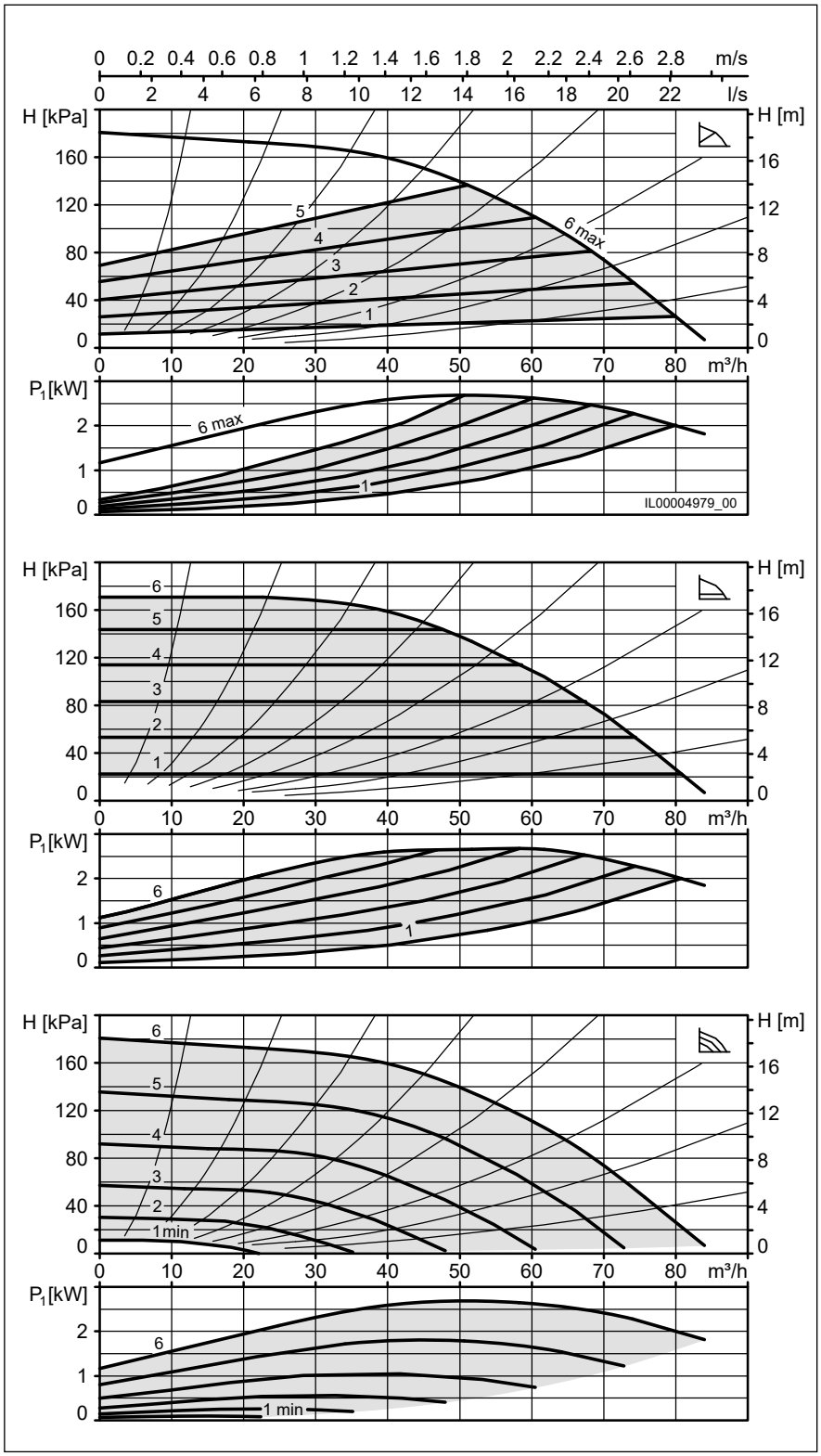

## VivarA S 100-18 450

| | |
|---|---|
| Minimum efficiency index (MEI) | ≥ 0.7 |
| Nominal width | DN 100 |
| Max. flow head H | 18 m |
| Overall length | 450 mm |
| Max. operating pressure | 16 bar |
| Media temperature | -20 °C…+140 °C |
| Ambient temperature | -20 °C…+40 °C |
| Net weight | 40 kg |

**Electrical data**

| | |
|---|---|
| Voltage | 3x400 V |
| Frequency | 50 Hz |
| Input power $P_1$ | 2.68 kW |
| Output power $P_2$ | 2.2 kW |
| Nominal current | 4.33 A |
| Speed | 4000 1/min |
| Motor protection | integrated |
| Protection rating | IP55 |
| Insulation class | F (155°C) |
| Motor efficiency class | IE5 |

**Required operating pressure at 500m a.s.l.**

| | |
|---|---|
| at a water temp. of 75 °C | 0.7 bar |
| at a water temp. of 95 °C | 1.2 bar |
| at a water temp. of 110 °C | 1.7 bar |
| for every ±100 m of altitude | 0.1 bar |

**Connction diagram**

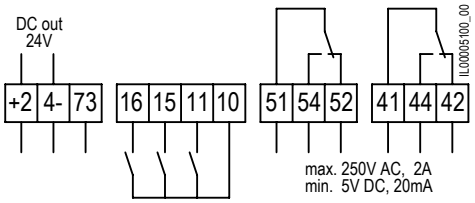


| | |
|---|---|
| **+24-** | 24 V DC out |
| **73** | Actual value input |
| **11,10** | External OFF or external ON (reversible) |
| **10,15** | Digital input minimum speed |
| **10,16** | Digital input maximum speed |
| **52, 54, 51** | Fault message or operating message |
| **42, 44, 41** | Operating or ready message |
| **L, N, PE** | Mains connection |

**Switch**

**1** Fault/operating message
**2** Operating/ready message
**3** External OFF or external ON

**Included in the scope of delivery**

– Sealing kit
– Screw kit

**Accessories**

– Biral Interface Modules
– Weld neck flange, pair PN10/16, DN100
– Sealing kits for flanges DN100, PN6 or PN16
– Base plate 235x235 KTL

| | **Art. no.** |
|---|---|
| VivarA S 100-18 450 | 7000000631 |

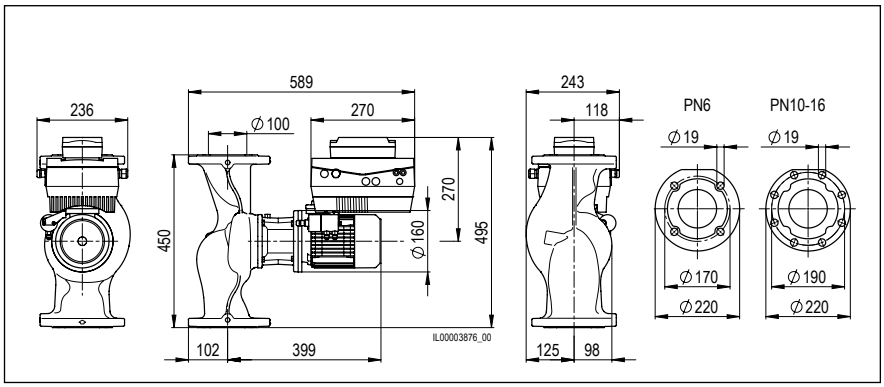


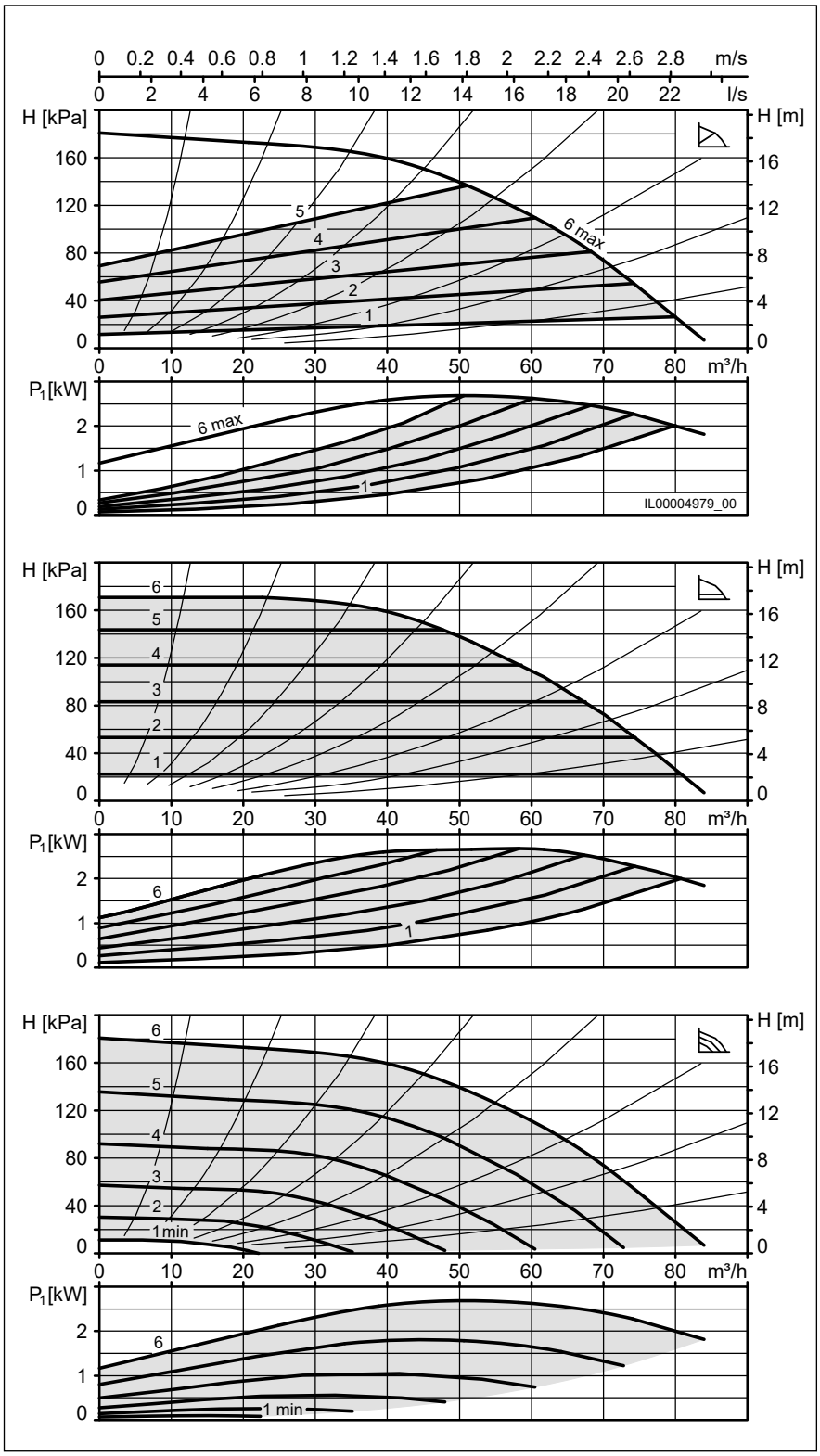

## VivarA M 100-16 450

| | |
|---|---|
| Minimum efficiency index (MEI) | ≥ 0.58 |
| Nominal width | DN 100 |
| Max. flow head H | 16 m |
| Overall length | 450 mm |
| Max. operating pressure | 16 bar |
| Media temperature | -20 °C…+140 °C |
| Ambient temperature | -20 °C…+40 °C |
| Net weight | 69 kg |

**Electrical data**

| | |
|---|---|
| Voltage | 3x400 V |
| Frequency | 50 Hz |
| Input power $P_1$ | 4.35 kW |
| Output power $P_2$ | 4 kW |
| Nominal current | 6.78 A |
| Speed | 3000 1/min |
| Motor protection | integrated |
| Protection rating | IP55 |
| Insulation class | F (155°C) |
| Motor efficiency class | IE5 |

**Required operating pressure at 500m a.s.l.**

| | |
|---|---|
| at a water temp. of 75 °C | 0.7 bar |
| at a water temp. of 95 °C | 1.2 bar |
| at a water temp. of 110 °C | 1.7 bar |
| for every ±100 m of altitude | 0.1 bar |

**Connction diagram**

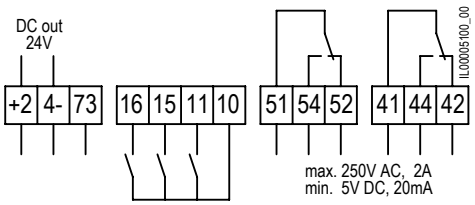


| | |
|---|---|
| **+24-** | 24 V DC out |
| **73** | Actual value input |
| **11,10** | External OFF or external ON (reversible) |
| **10,15** | Digital input minimum speed |
| **10,16** | Digital input maximum speed |
| **52, 54, 51** | Fault message or operating message |
| **42, 44, 41** | Operating or ready message |
| **L, N, PE** | Mains connection |

**Switch**

**1** Fault/operating message
**2** Operating/ready message
**3** External OFF or external ON

**Included in the scope of delivery**

– Sealing kit
– Screw kit

**Accessories**

– Biral Interface Modules
– Weld neck flange, pair PN10/16, DN100
– Sealing kits for flanges DN100, PN6 or PN16
– Base plate 235x235 KTL

| | **Art. no.** |
|---|---|
| VivarA M 100-16 450 | 7000000650 |

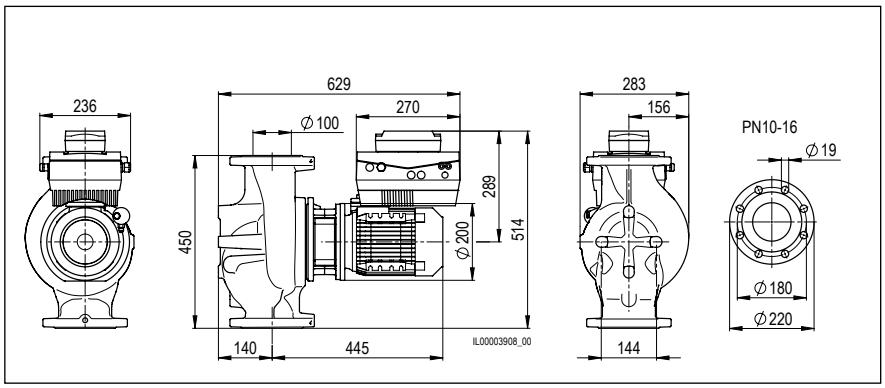


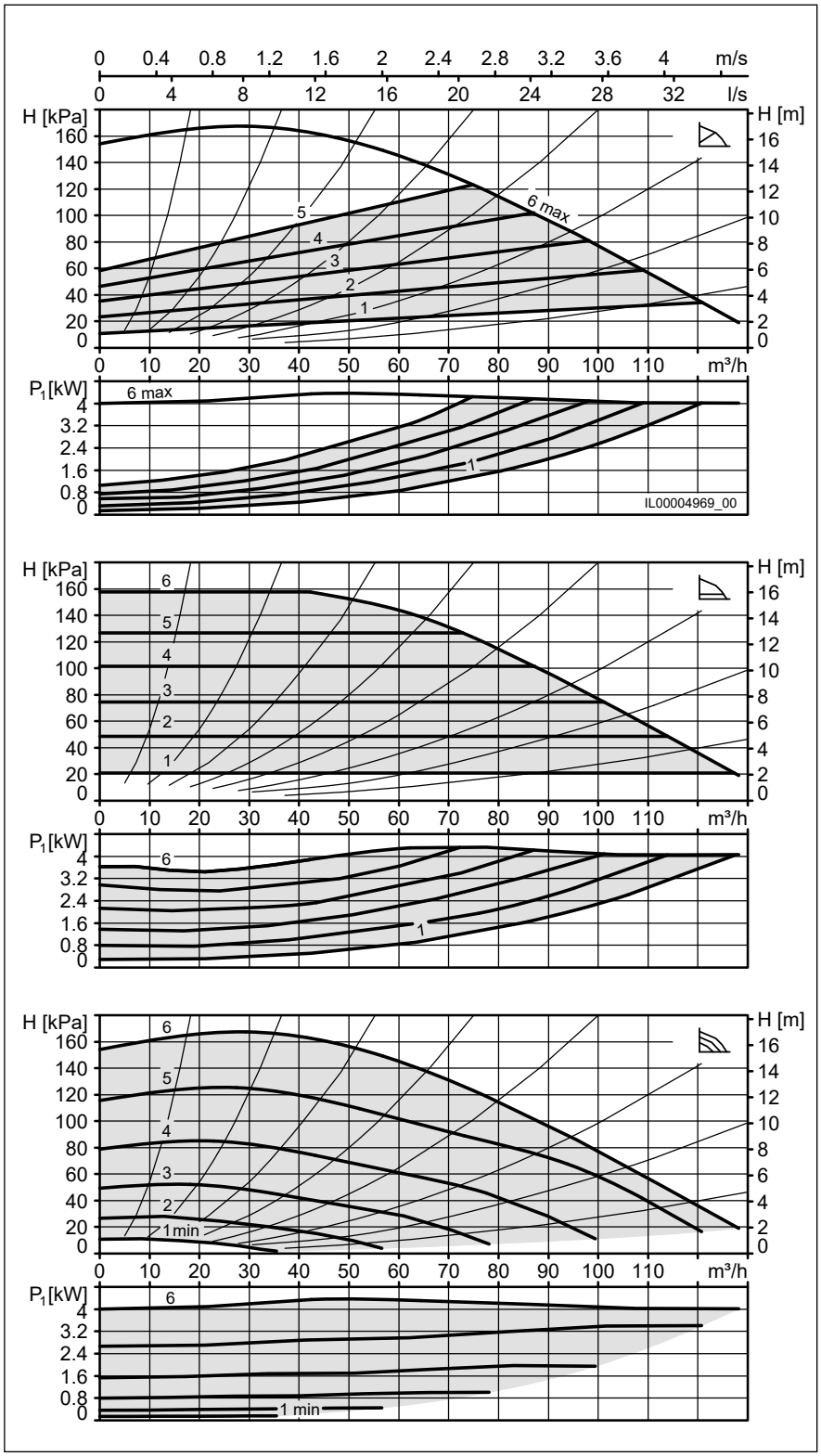


Datasheets

## VivarA M 100-20 450

| | |
|---|---|
| Minimum efficiency index (MEI) | ≥ 0.58 |
| Nominal width | DN 100 |
| Max. flow head H | 20 m |
| Overall length | 450 mm |
| Max. operating pressure | 16 bar |
| Media temperature | -20 °C…+140 °C |
| Ambient temperature | -20 °C…+40 °C |
| Net weight | 76 kg |

**Electrical data**

| | |
|---|---|
| Voltage | 3x400 V |
| Frequency | 50 Hz |
| Input power $P_1$ | 5.94 kW |
| Output power $P_2$ | 5.5 kW |
| Nominal current | 9.66 A |
| Speed | 3000 1/min |
| Motor protection | integrated |
| Protection rating | IP55 |
| Insulation class | F (155°C) |
| Motor efficiency class | IE5 |

**Required operating pressure at 500m a.s.l.**

| | |
|---|---|
| at a water temp. of 75 °C | 0.7 bar |
| at a water temp. of 95 °C | 1.2 bar |
| at a water temp. of 110 °C | 1.7 bar |
| for every ±100 m of altitude | 0.1 bar |

**Connction diagram**

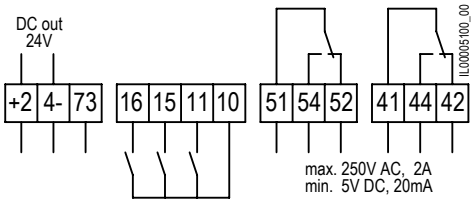


| | |
|---|---|
| **+24-** | 24 V DC out |
| **73** | Actual value input |
| **11,10** | External OFF or external ON (reversible) |
| **10,15** | Digital input minimum speed |
| **10,16** | Digital input maximum speed |
| **52, 54, 51** | Fault message or operating message |
| **42, 44, 41** | Operating or ready message |
| **L, N, PE** | Mains connection |

**Switch**

**1** Fault/operating message
**2** Operating/ready message
**3** External OFF or external ON

**Included in the scope of delivery**

– Sealing kit
– Screw kit

**Accessories**

– Biral Interface Modules
– Weld neck flange, pair PN10/16, DN100
– Sealing kits for flanges DN100, PN6 or PN16
– Base plate 235x235 KTL

| | **Art. no.** |
|---|---|
| VivarA M 100-20 450 | 7000000651 |

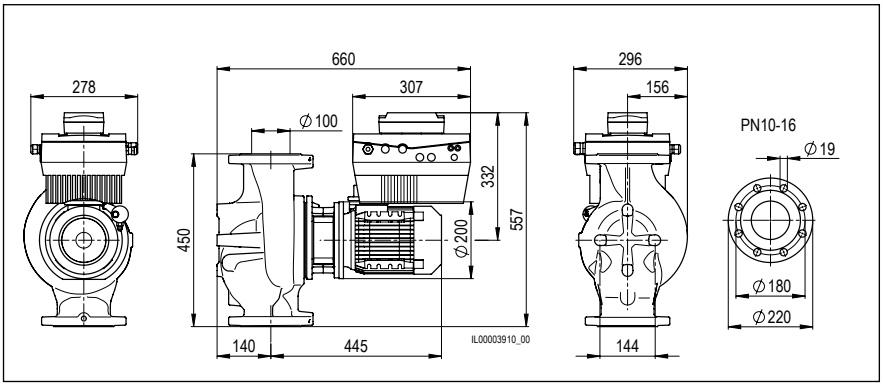


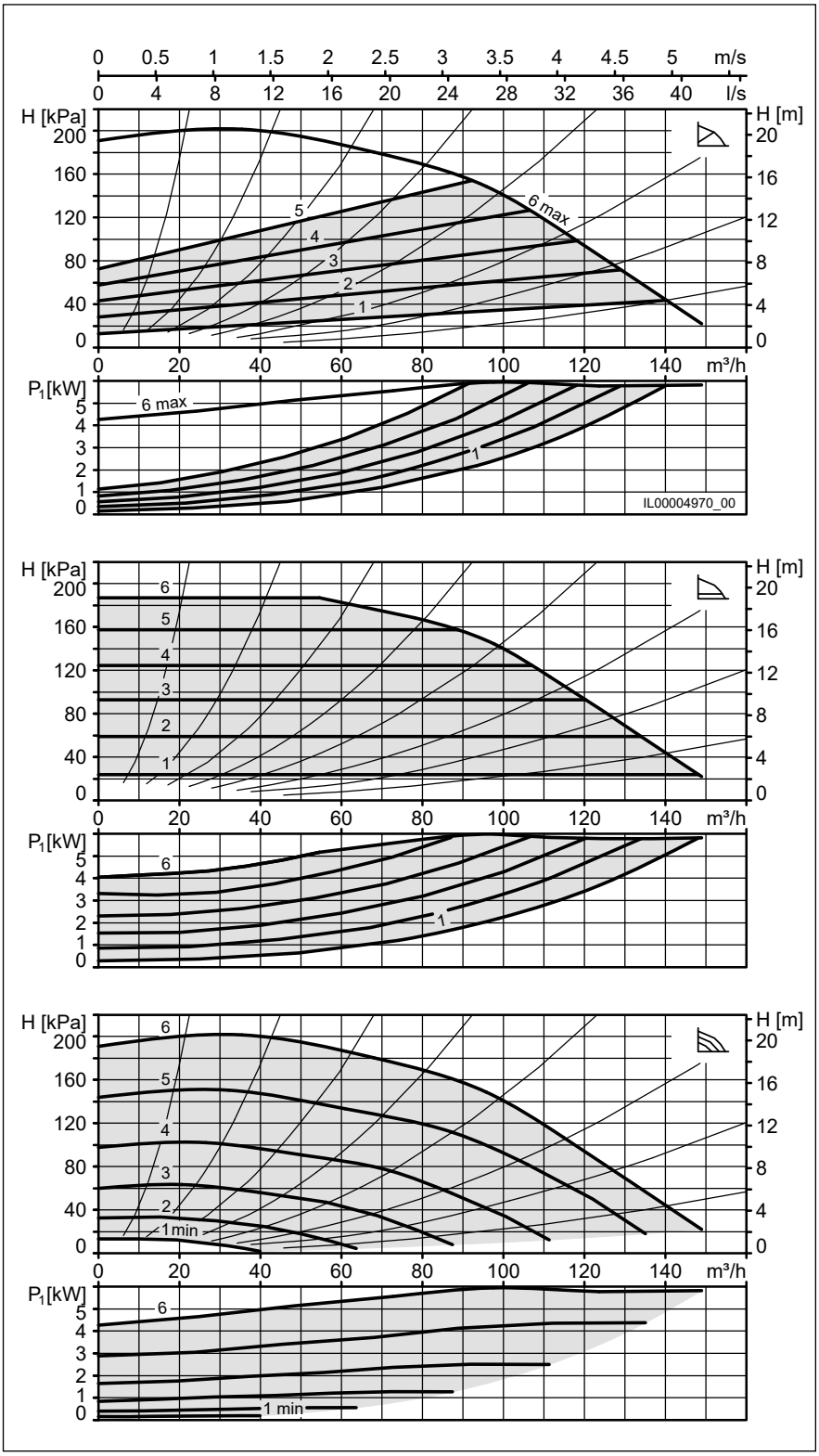

## VivarA M 100-24 450

| | |
|---|---|
| Minimum efficiency index (MEI) | ≥ 0.58 |
| Nominal width | DN 100 |
| Max. flow head H | 24 m |
| Overall length | 450 mm |
| Max. operating pressure | 16 bar |
| Media temperature | -20 °C…+140 °C |
| Ambient temperature | -20 °C…+40 °C |
| Net weight | 86 kg |

**Electrical data**

| | |
|---|---|
| Voltage | 3x400 V |
| Frequency | 50 Hz |
| Input power $P_1$ | 7.7 kW |
| Output power $P_2$ | 7.5 kW |
| Nominal current | 12.36 A |
| Speed | 3000 1/min |
| Motor protection | integrated |
| Protection rating | IP55 |
| Insulation class | F (155°C) |
| Motor efficiency class | IE5 |

**Required operating pressure at 500m a.s.l.**

| | |
|---|---|
| at a water temp. of 75 °C | 0.7 bar |
| at a water temp. of 95 °C | 1.2 bar |
| at a water temp. of 110 °C | 1.7 bar |
| for every ±100 m of altitude | 0.1 bar |

**Connction diagram**

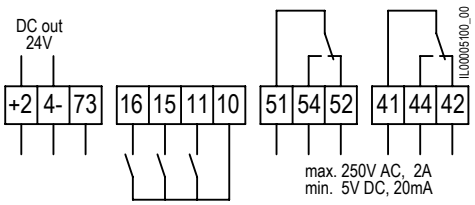


| | |
|---|---|
| **+24-** | 24 V DC out |
| **73** | Actual value input |
| **11,10** | External OFF or external ON (reversible) |
| **10,15** | Digital input minimum speed |
| **10,16** | Digital input maximum speed |
| **52, 54, 51** | Fault message or operating message |
| **42, 44, 41** | Operating or ready message |
| **L, N, PE** | Mains connection |

**Switch**

**1** Fault/operating message
**2** Operating/ready message
**3** External OFF or external ON

**Included in the scope of delivery**

– Sealing kit
– Screw kit

**Accessories**

– Biral Interface Modules
– Weld neck flange, pair PN10/16, DN100
– Sealing kits for flanges DN100, PN6 or PN16
– Base plate 235x235 KTL

| | **Art. no.** |
|---|---|
| VivarA M 100-24 450 | 7000000652 |

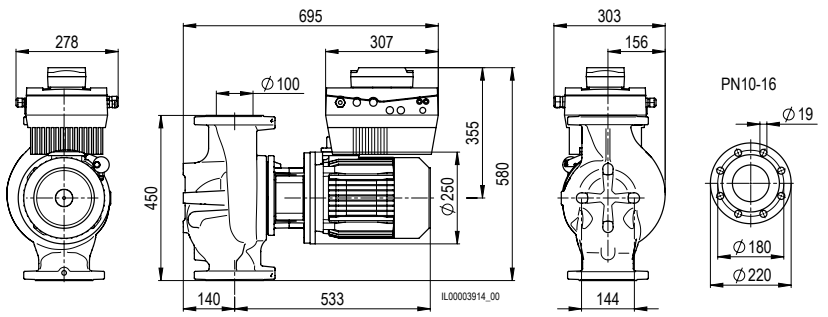


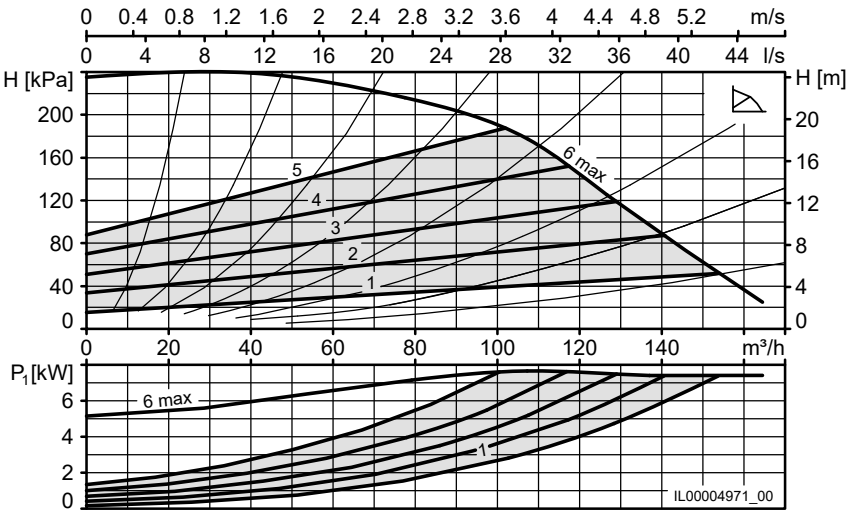


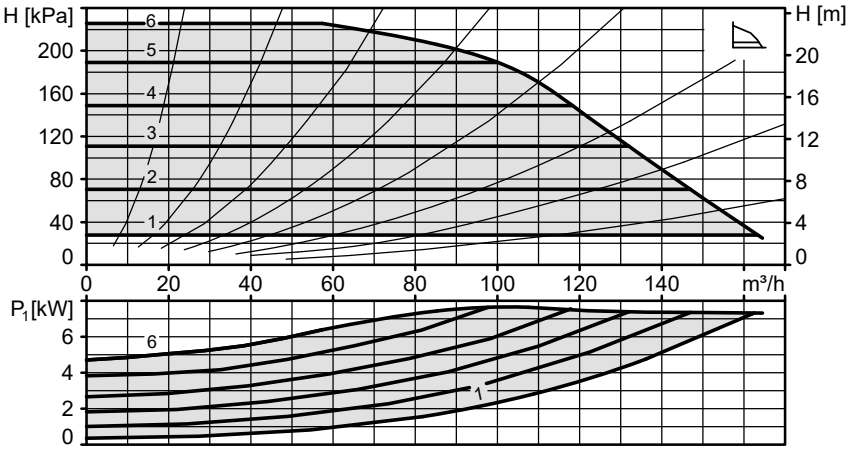


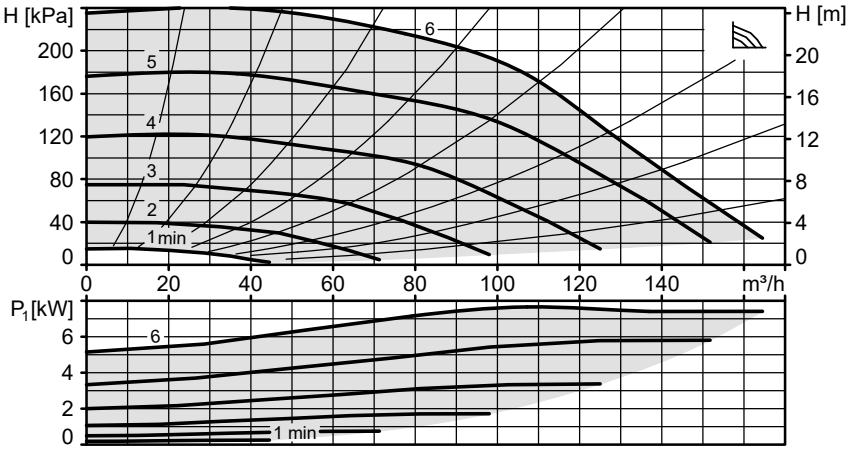


Datasheets

## VivarA M 100-25 550

| | |
|---|---|
| Minimum efficiency index (MEI) | ≥ 0.7 |
| Nominal width | DN 100 |
| Max. flow head H | 25 m |
| Overall length | 550 mm |
| Max. operating pressure | 16 bar |
| Media temperature | -20 °C…+140 °C |
| Ambient temperature | -20 °C…+40 °C |
| Net weight | 127 kg |

### Electrical data

| | |
|---|---|
| Voltage | 3x400 V |
| Frequency | 50 Hz |
| Input power $P_1$ | 10.89 kW |
| Output power $P_2$ | 11 kW |
| Nominal current | 17.79 A |
| Speed | 3000 1/min |
| Motor protection | integrated |
| Protection rating | IP55 |
| Insulation class | F (155°C) |
| Motor efficiency class | IE5 |

### Required operating pressure at 500m a.s.l.

| | |
|---|---|
| at a water temp. of 75 °C | 0.7 bar |
| at a water temp. of 95 °C | 1.2 bar |
| at a water temp. of 110 °C | 1.7 bar |
| for every ±100 m of altitude | 0.1 bar |

### Connction diagram

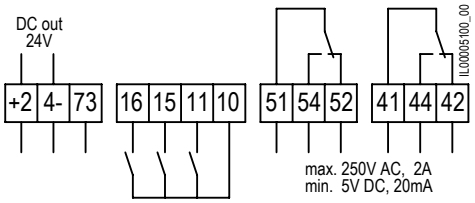


| | |
|---|---|
| **+24-** | 24 V DC out |
| **73** | Actual value input |
| **11,10** | External OFF or external ON (reversible) |
| **10,15** | Digital input minimum speed |
| **10,16** | Digital input maximum speed |
| **52, 54, 51** | Fault message or operating message |
| **42, 44, 41** | Operating or ready message |
| **L, N, PE** | Mains connection |

### Switch

**1** Fault/operating message
**2** Operating/ready message
**3** External OFF or external ON

### Included in the scope of delivery

– Sealing kit
– Screw kit

### Accessories

– Biral Interface Modules
– Weld neck flange, pair PN10/16, DN100
– Sealing kits for flanges DN100, PN6 or PN16

| | **Art. no.** |
|---|---|
| VivarA M 100-25 550 | 7000000653 |

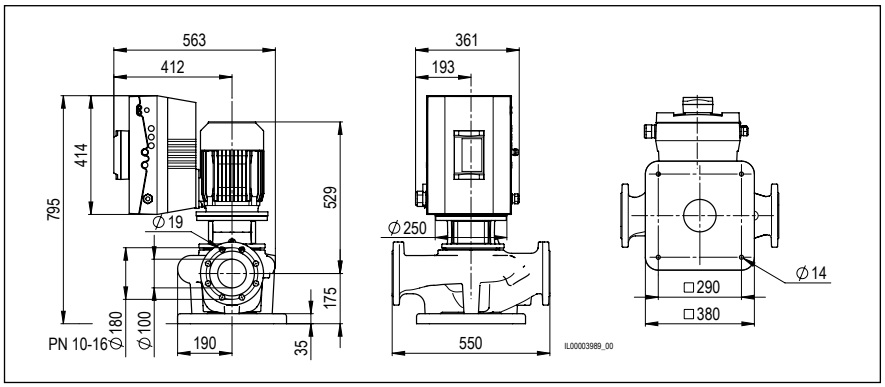


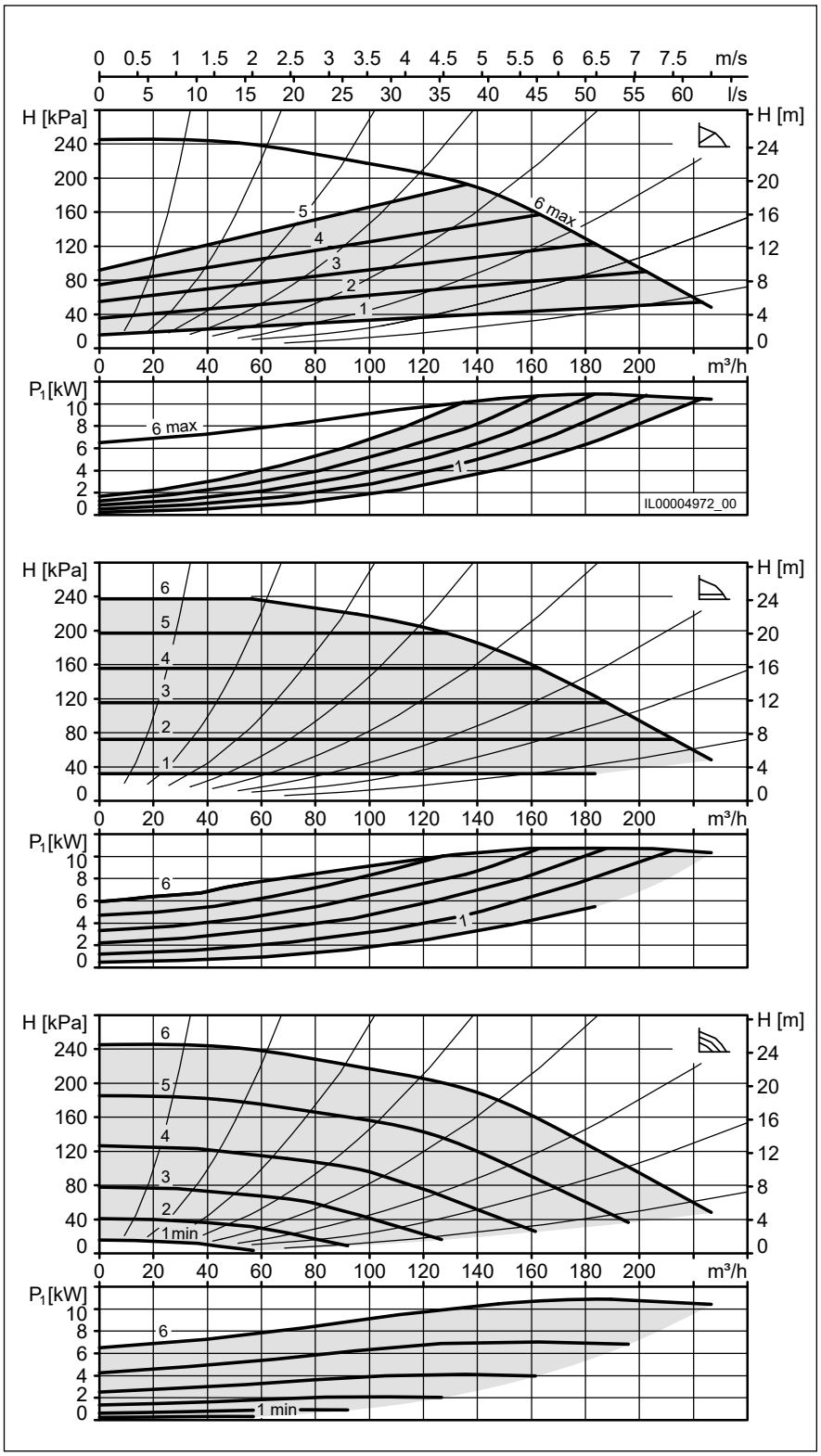

## VivarA M 100-31 550

| | |
|---|---|
| Minimum efficiency index (MEI) | ≥ 0.7 |
| Nominal width | DN 100 |
| Max. flow head H | 31 m |
| Overall length | 550 mm |
| Max. operating pressure | 16 bar |
| Media temperature | -20 °C…+140 °C |
| Ambient temperature | -20 °C…+40 °C |
| Net weight | 130 kg |

**Electrical data**

| | |
|---|---|
| Voltage | 3x400 V |
| Frequency | 50 Hz |
| Input power $P_1$ | 15.25 kW |
| Output power $P_2$ | 15 kW |
| Nominal current | 24.55 A |
| Speed | 3000 1/min |
| Motor protection | integrated |
| Protection rating | IP55 |
| Insulation class | F (155°C) |
| Motor efficiency class | IE5 |

**Required operating pressure at 500m a.s.l.**

| | |
|---|---|
| at a water temp. of 75 °C | 0.7 bar |
| at a water temp. of 95 °C | 1.2 bar |
| at a water temp. of 110 °C | 1.7 bar |
| for every ±100 m of altitude | 0.1 bar |

**Connction diagram**

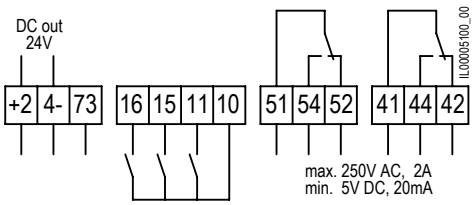


| | |
|---|---|
| **+24-** | 24 V DC out |
| **73** | Actual value input |
| **11,10** | External OFF or external ON (reversible) |
| **10,15** | Digital input minimum speed |
| **10,16** | Digital input maximum speed |
| **52, 54, 51** | Fault message or operating message |
| **42, 44, 41** | Operating or ready message |
| **L, N, PE** | Mains connection |

**Switch**

**1** Fault/operating message
**2** Operating/ready message
**3** External OFF or external ON

**Included in the scope of delivery**

– Sealing kit
– Screw kit

**Accessories**

– Biral Interface Modules
– Weld neck flange, pair PN10/16, DN100
– Sealing kits for flanges DN100, PN6 or PN16

| | **Art. no.** |
|---|---|
| VivarA M 100-31 550 | 7000000654 |

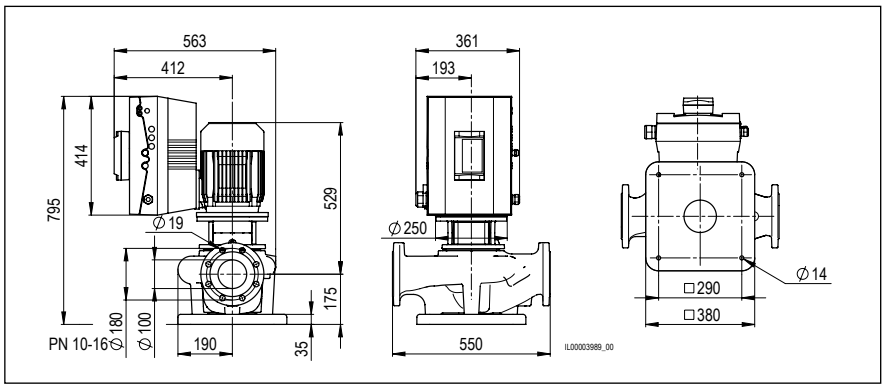


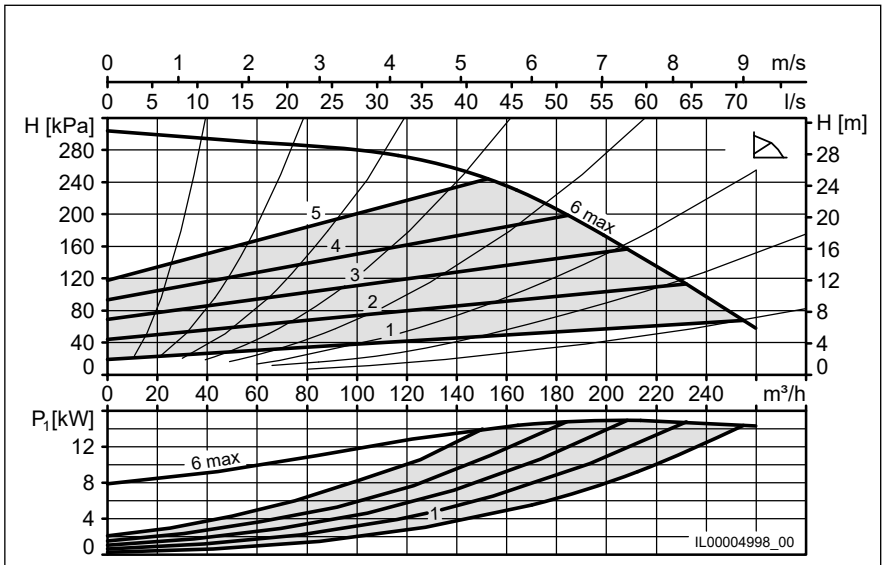


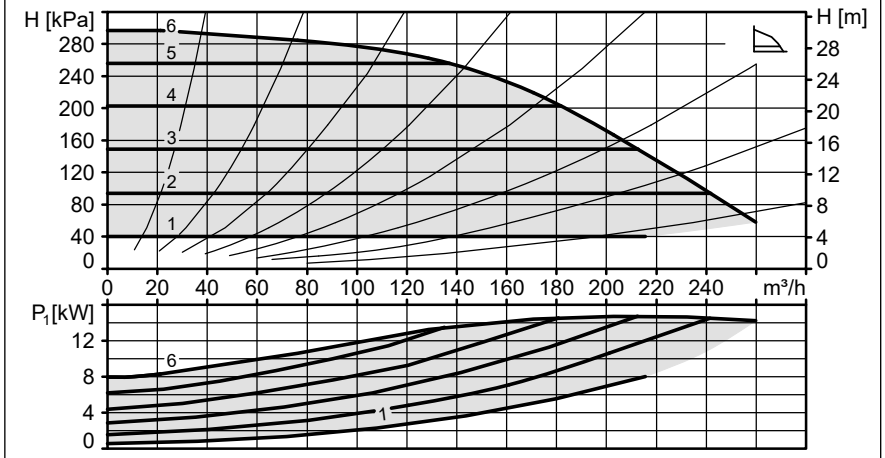


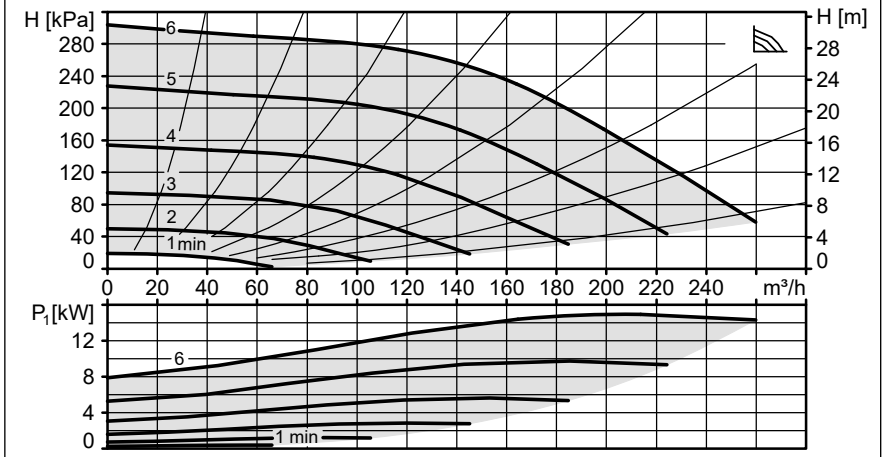


Datasheets

## VivarA M 100-36 550

| | |
|---|---|
| Minimum efficiency index (MEI) | ≥ 0.7 |
| Nominal width | DN 100 |
| Max. flow head H | 36 m |
| Overall length | 550 mm |
| Max. operating pressure | 16 bar |
| Media temperature | -20 °C…+140 °C |
| Ambient temperature | -20 °C…+40 °C |
| Net weight | 160 kg |

**Electrical data**

| | |
|---|---|
| Voltage | 3x400 V |
| Frequency | 50 Hz |
| Input power $P_1$ | 18.81 kW |
| Output power $P_2$ | 18.5 kW |
| Nominal current | 29.5 A |
| Speed | 3000 1/min |
| Motor protection | integrated |
| Protection rating | IP55 |
| Insulation class | F (155°C) |
| Motor efficiency class | IE5 |

**Required operating pressure at 500m a.s.l.**

| | |
|---|---|
| at a water temp. of 75 °C | 0.7 bar |
| at a water temp. of 95 °C | 1.2 bar |
| at a water temp. of 110 °C | 1.7 bar |
| for every ±100 m of altitude | 0.1 bar |

**Connction diagram**

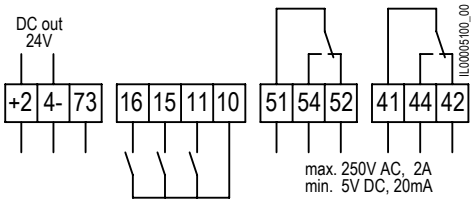


| | |
|---|---|
| **+24-** | 24 V DC out |
| **73** | Actual value input |
| **11,10** | External OFF or external ON (reversible) |
| **10,15** | Digital input minimum speed |
| **10,16** | Digital input maximum speed |
| **52, 54, 51** | Fault message or operating message |
| **42, 44, 41** | Operating or ready message |
| **L, N, PE** | Mains connection |

**Switch**

**1** Fault/operating message
**2** Operating/ready message
**3** External OFF or external ON

**Included in the scope of delivery**

– Sealing kit
– Screw kit

**Accessories**

– Biral Interface Modules
– Weld neck flange, pair PN10/16, DN100
– Sealing kits for flanges DN100, PN6 or PN16

| | **Art. no.** |
|---|---|
| VivarA M 100-36 550 | 7000000655 |

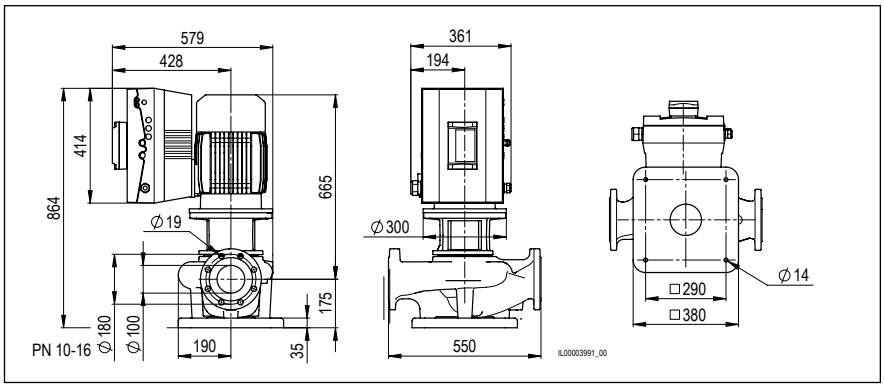


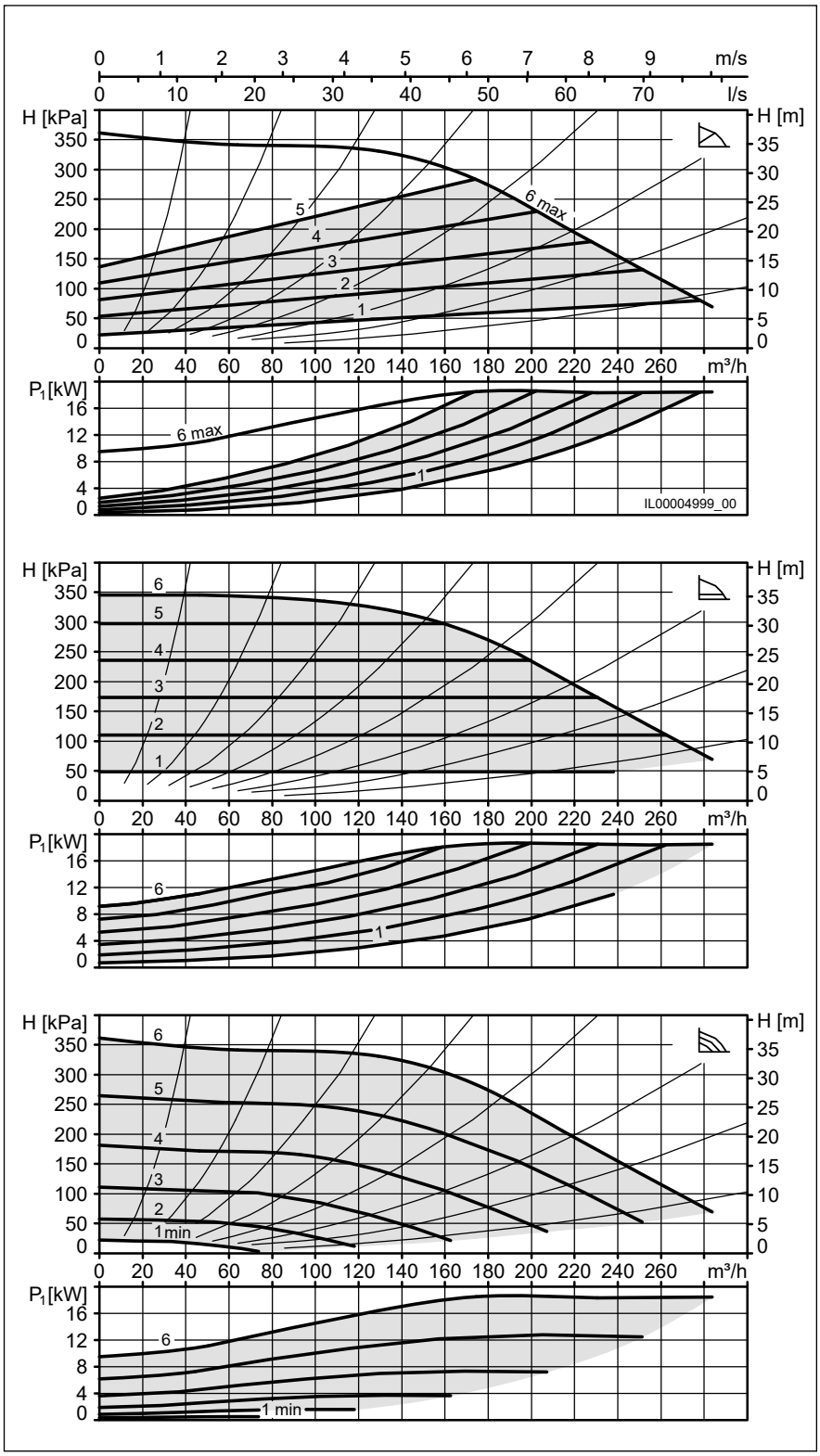

## VivarA M 125-11 620

| | |
|---|---|
| Minimum efficiency index (MEI) | ≥ 0.59 |
| Nominal width | DN 125 |
| Max. flow head H | 11 m |
| Overall length | 620 mm |
| Max. operating pressure | 16 bar |
| Media temperature | -20 °C…+140 °C |
| Ambient temperature | -20 °C…+40 °C |
| Net weight | 172 kg |

**Electrical data**

| | |
|---|---|
| Voltage | 3x400 V |
| Frequency | 50 Hz |
| Input power $P_1$ | 4.75 kW |
| Output power $P_2$ | 4 kW |
| Nominal current | 7.42 A |
| Speed | 1500 1/min |
| Motor protection | integrated |
| Protection rating | IP55 |
| Insulation class | F (155°C) |
| Motor efficiency class | IE5 |

**Required operating pressure at 500m a.s.l.**

| | |
|---|---|
| at a water temp. of 75 °C | 0.7 bar |
| at a water temp. of 95 °C | 1.2 bar |
| at a water temp. of 110 °C | 1.7 bar |
| for every ±100 m of altitude | 0.1 bar |

**Connction diagram**

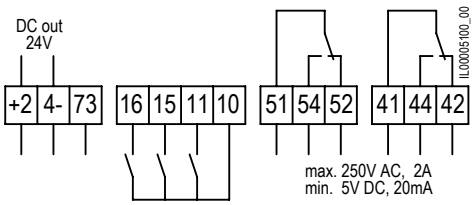


| | |
|---|---|
| **+24-** | 24 V DC out |
| **73** | Actual value input |
| **11,10** | External OFF or external ON (reversible) |
| **10,15** | Digital input minimum speed |
| **10,16** | Digital input maximum speed |
| **52, 54, 51** | Fault message or operating message |
| **42, 44, 41** | Operating or ready message |
| **L, N, PE** | Mains connection |

**Switch**

**1** Fault/operating message
**2** Operating/ready message
**3** External OFF or external ON

**Included in the scope of delivery**

– Sealing kit
– Screw kit

**Accessories**

– Biral Interface Modules
– Weld neck flange, pair PN10/16, DN125
– Sealing kits for flanges DN125, PN16
– Base plate 235x235 KTL

| | **Art. no.** |
|---|---|
| VivarA M 125-11 620 | 7000000659 |

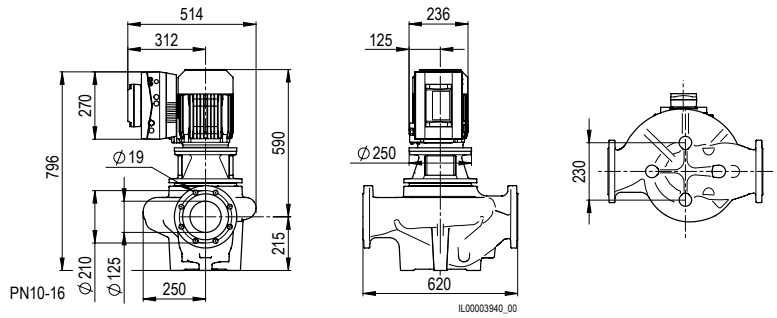


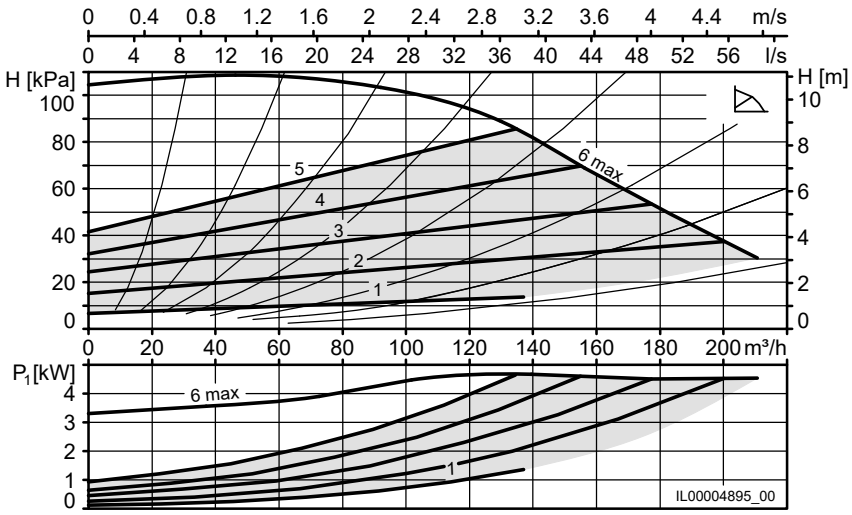


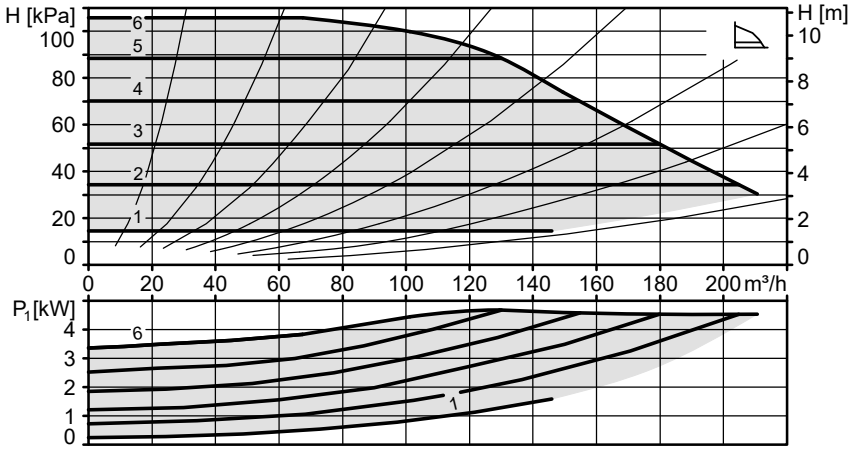


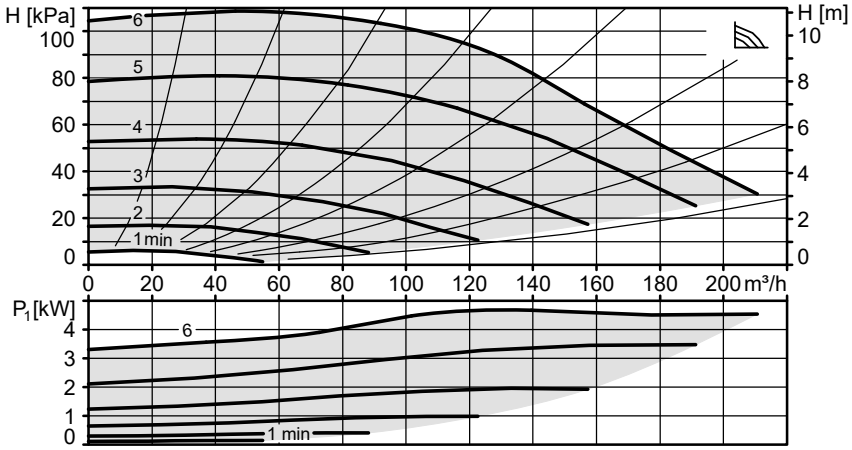


Datasheets

## VivarA M 125-13 620

| | |
|---|---|
| Minimum efficiency index (MEI) | ≥ 0.59 |
| Nominal width | DN 125 |
| Max. flow head H | 13 m |
| Overall length | 620 mm |
| Max. operating pressure | 16 bar |
| Media temperature | -20 °C…+140 °C |
| Ambient temperature | -20 °C…+40 °C |
| Net weight | 178 kg |

**Electrical data**

| | |
|---|---|
| Voltage | 3x400 V |
| Frequency | 50 Hz |
| Input power $P_1$ | 6.3 kW |
| Output power $P_2$ | 5.5 kW |
| Nominal current | 10.12 A |
| Speed | 1500 1/min |
| Motor protection | integrated |
| Protection rating | IP55 |
| Insulation class | F (155°C) |
| Motor efficiency class | IE5 |

**Required operating pressure at 500m a.s.l.**

| | |
|---|---|
| at a water temp. of 75 °C | 0.7 bar |
| at a water temp. of 95 °C | 1.2 bar |
| at a water temp. of 110 °C | 1.7 bar |
| for every ±100 m of altitude | 0.1 bar |

**Connction diagram**

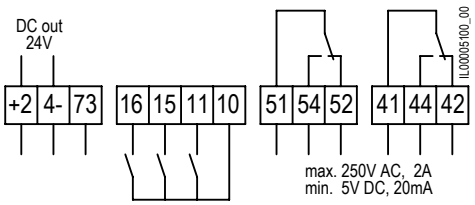


| | |
|---|---|
| **+24-** | 24 V DC out |
| **73** | Actual value input |
| **11,10** | External OFF or external ON (reversible) |
| **10,15** | Digital input minimum speed |
| **10,16** | Digital input maximum speed |
| **52, 54, 51** | Fault message or operating message |
| **42, 44, 41** | Operating or ready message |
| **L, N, PE** | Mains connection |

**Switch**

**1** Fault/operating message
**2** Operating/ready message
**3** External OFF or external ON

**Included in the scope of delivery**

– Sealing kit
– Screw kit

**Accessories**

– Biral Interface Modules
– Weld neck flange, pair PN10/16, DN125
– Sealing kits for flanges DN125, PN16
– Base plate 235x235 KTL

| | **Art. no.** |
|---|---|
| VivarA M 125-13 620 | 7000000660 |

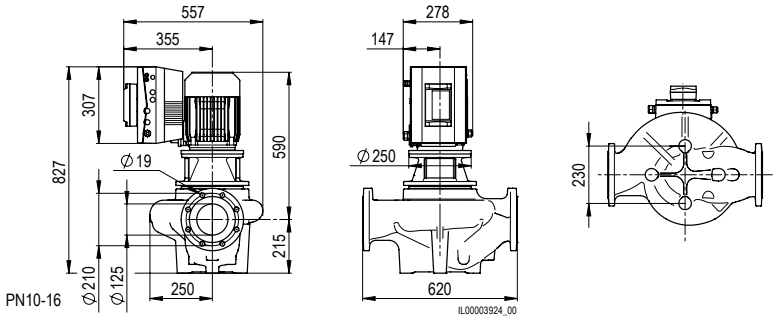


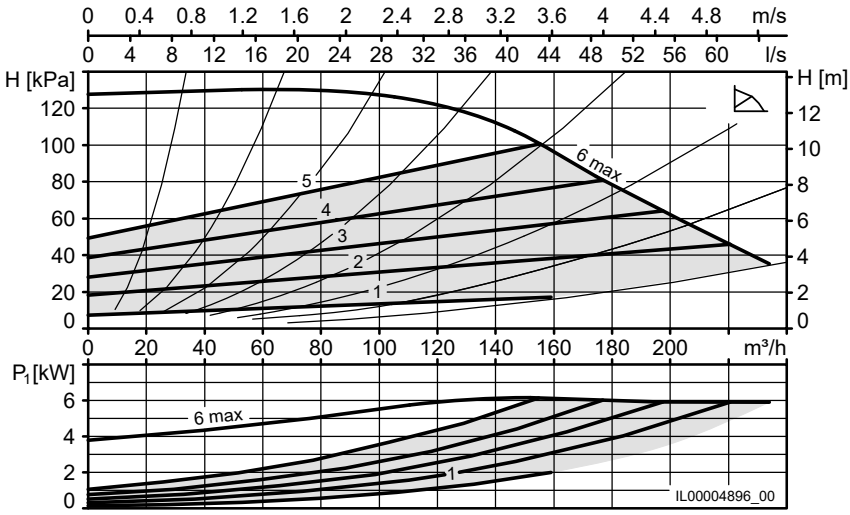


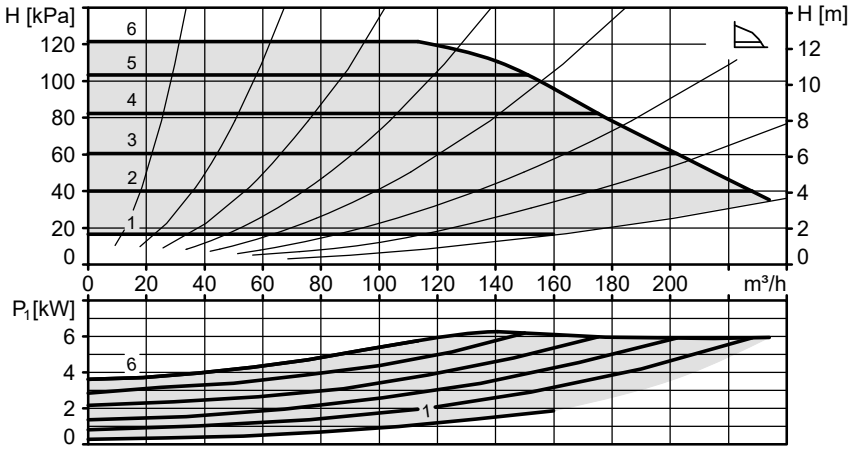


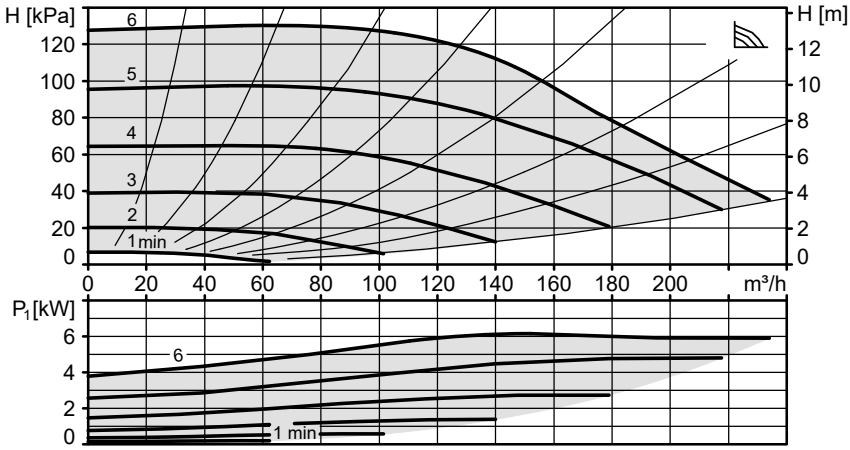

## VivarA M 125-16 620

| | |
|---|---|
| Minimum efficiency index (MEI) | ≥ 0.59 |
| Nominal width | DN 125 |
| Max. flow head H | 16 m |
| Overall length | 620 mm |
| Max. operating pressure | 16 bar |
| Media temperature | -20 °C…+140 °C |
| Ambient temperature | -20 °C…+40 °C |
| Net weight | 183 kg |

**Electrical data**

| | |
|---|---|
| Voltage | 3x400 V |
| Frequency | 50 Hz |
| Input power $P_1$ | 8.29 kW |
| Output power $P_2$ | 7.5 kW |
| Nominal current | 13.2 A |
| Speed | 1500 1/min |
| Motor protection | integrated |
| Protection rating | IP55 |
| Insulation class | F (155°C) |
| Motor efficiency class | IE5 |

**Required operating pressure at 500m a.s.l.**

| | |
|---|---|
| at a water temp. of 75 °C | 0.7 bar |
| at a water temp. of 95 °C | 1.2 bar |
| at a water temp. of 110 °C | 1.7 bar |
| for every ±100 m of altitude | 0.1 bar |

**Connction diagram**

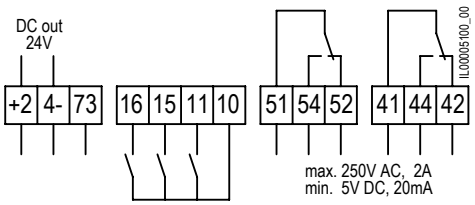


| | |
|---|---|
| **+24-** | 24 V DC out |
| **73** | Actual value input |
| **11,10** | External OFF or external ON (reversible) |
| **10,15** | Digital input minimum speed |
| **10,16** | Digital input maximum speed |
| **52, 54, 51** | Fault message or operating message |
| **42, 44, 41** | Operating or ready message |
| **L, N, PE** | Mains connection |

**Switch**

**1** Fault/operating message
**2** Operating/ready message
**3** External OFF or external ON

**Included in the scope of delivery**

– Sealing kit
– Screw kit

**Accessories**

– Biral Interface Modules
– Weld neck flange, pair PN10/16, DN125
– Sealing kits for flanges DN125, PN16
– Base plate 235x235 KTL

| | **Art. no.** |
|---|---|
| VivarA M 125-16 620 | 7000000661 |

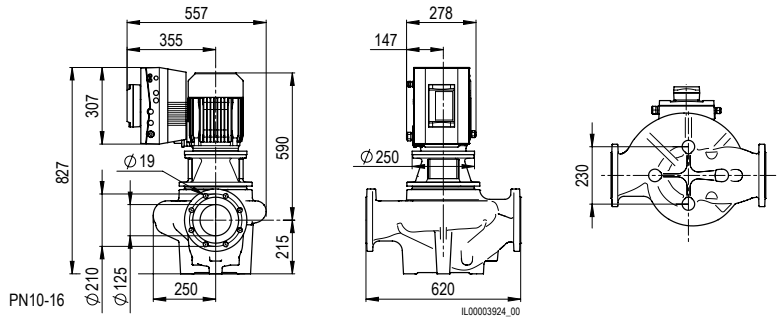


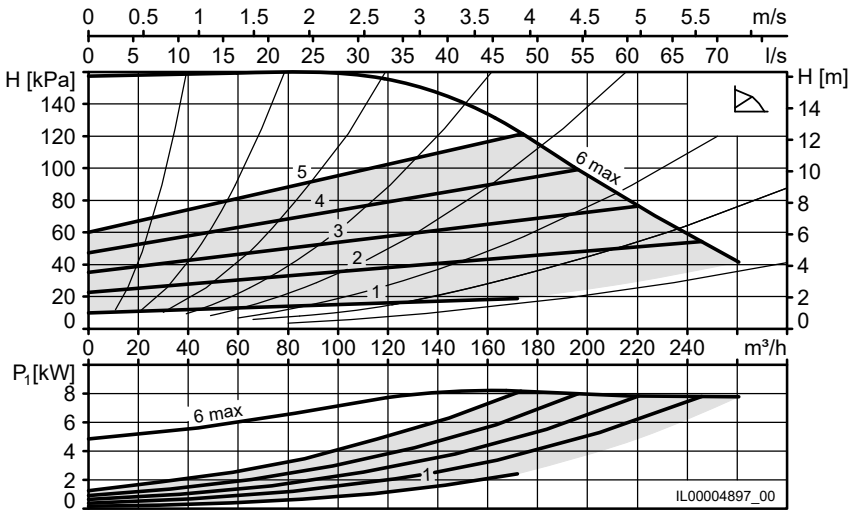


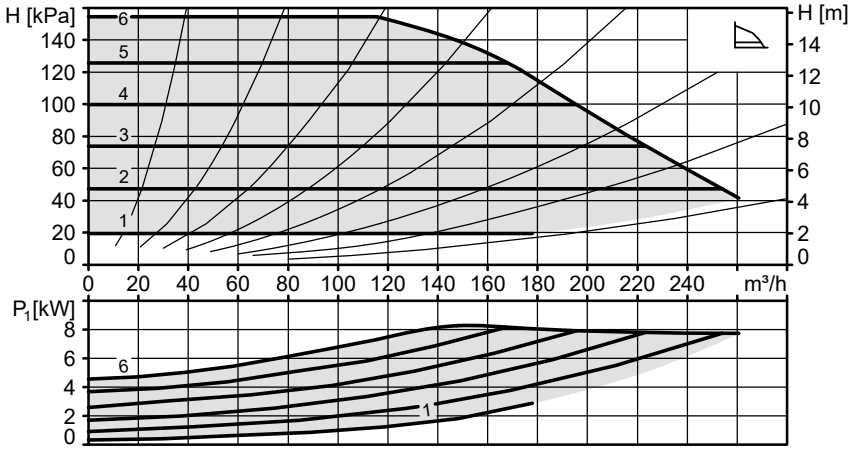


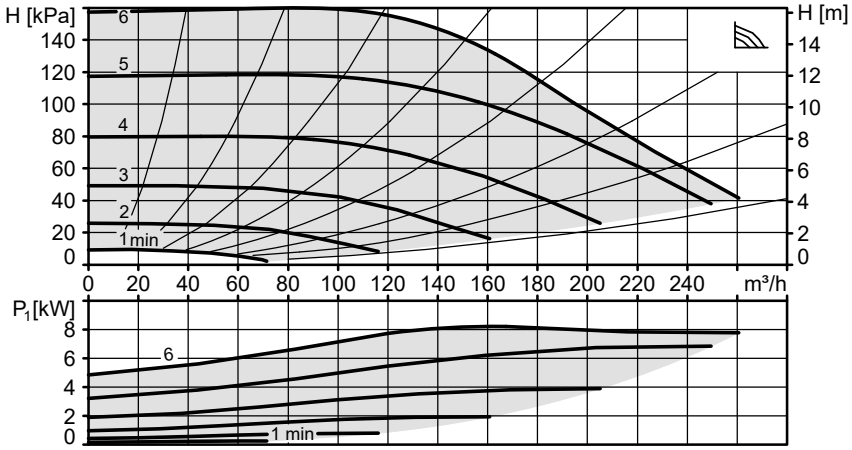


Datasheets

## VivarA M 125-19 620

| | |
|---|---|
| Minimum efficiency index (MEI) | ≥ 0.59 |
| Nominal width | DN 125 |
| Max. flow head H | 19 m |
| Overall length | 620 mm |
| Max. operating pressure | 16 bar |
| Media temperature | -20 °C…+140 °C |
| Ambient temperature | -20 °C…+40 °C |
| Net weight | 230 kg |

**Electrical data**

| | |
|---|---|
| Voltage | 3x400 V |
| Frequency | 50 Hz |
| Input power $P_1$ | 13.35 kW |
| Output power $P_2$ | 11 kW |
| Nominal current | 21.45 A |
| Speed | 1500 1/min |
| Motor protection | integrated |
| Protection rating | IP55 |
| Insulation class | F (155°C) |
| Motor efficiency class | IE5 |

**Required operating pressure at 500m a.s.l.**

| | |
|---|---|
| at a water temp. of 75 °C | 0.7 bar |
| at a water temp. of 95 °C | 1.2 bar |
| at a water temp. of 110 °C | 1.7 bar |
| for every ±100 m of altitude | 0.1 bar |

**Connction diagram**

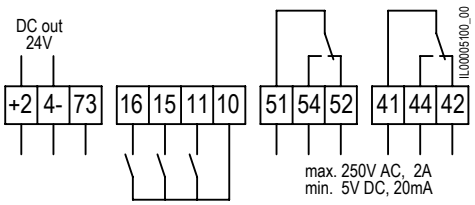


| | |
|---|---|
| **+24-** | 24 V DC out |
| **73** | Actual value input |
| **11,10** | External OFF or external ON (reversible) |
| **10,15** | Digital input minimum speed |
| **10,16** | Digital input maximum speed |
| **52, 54, 51** | Fault message or operating message |
| **42, 44, 41** | Operating or ready message |
| **L, N, PE** | Mains connection |

**Switch**

**1** Fault/operating message
**2** Operating/ready message
**3** External OFF or external ON

**Included in the scope of delivery**

– Sealing kit
– Screw kit

**Accessories**

– Biral Interface Modules
– Weld neck flange, pair PN10/16, DN125
– Sealing kits for flanges DN125, PN16

| | **Art. no.** |
|---|---|
| VivarA M 125-19 620 | 7000000662 |

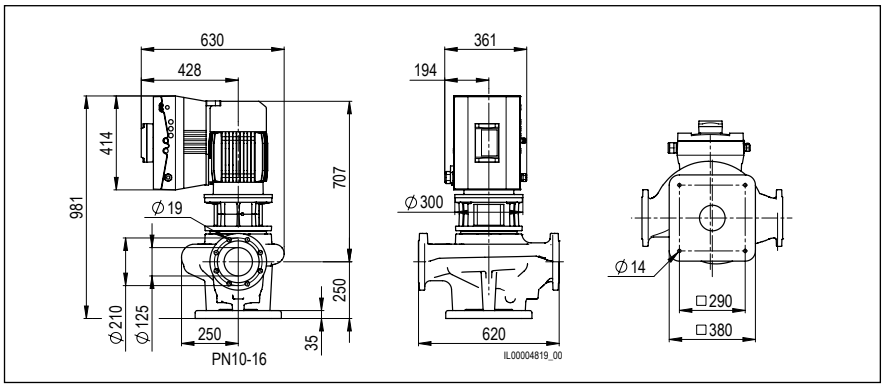


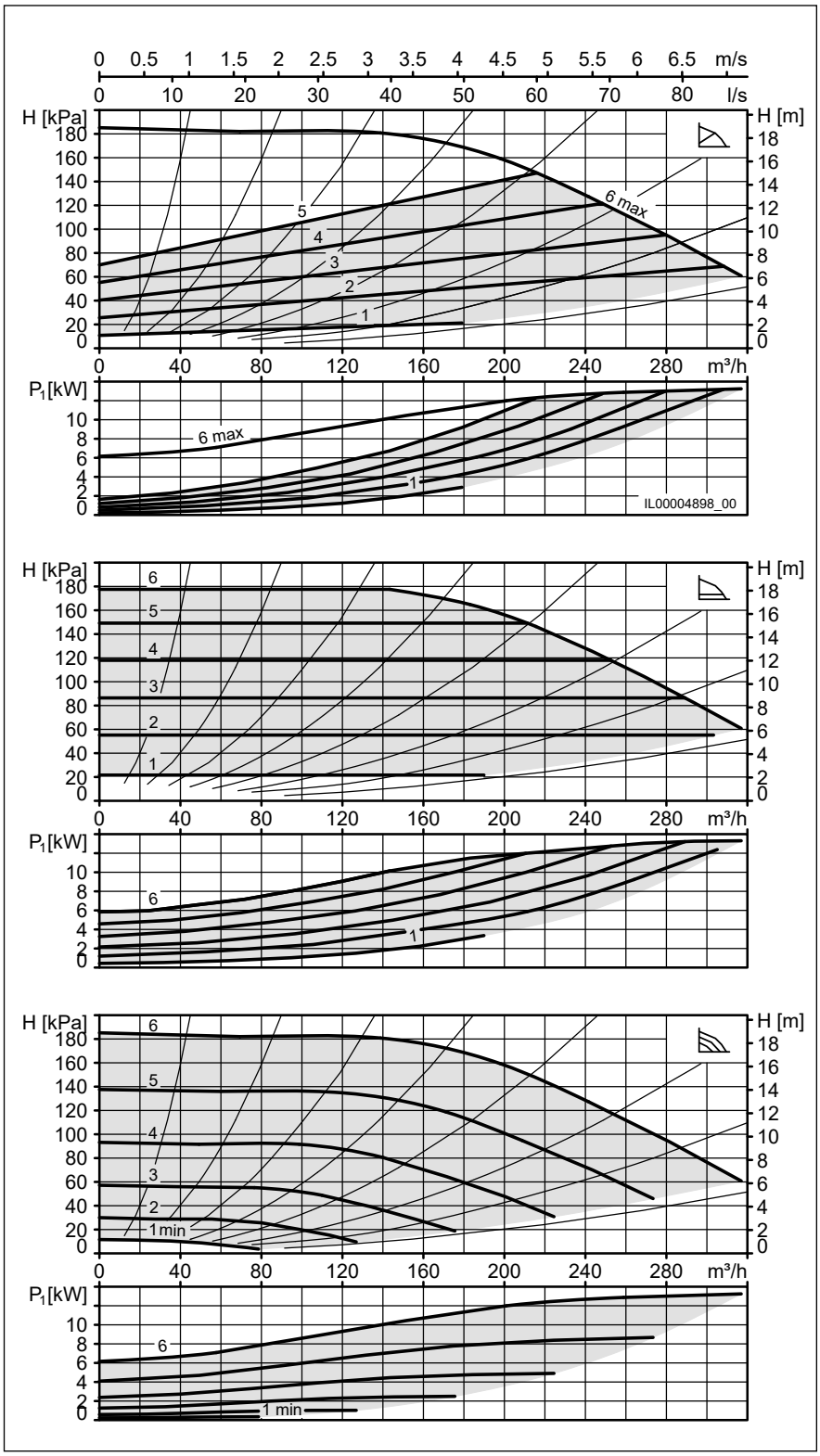

## VivarA M 125-23 800

| | |
|---|---|
| Minimum efficiency index (MEI) | ≥ 0.7 |
| Nominal width | DN 125 |
| Max. flow head H | 23 m |
| Overall length | 800 mm |
| Max. operating pressure | 16 bar |
| Media temperature | -20 °C…+140 °C |
| Ambient temperature | -20 °C…+40 °C |
| Net weight | 276 kg |

**Electrical data**

| | |
|---|---|
| Voltage | 3x400 V |
| Frequency | 50 Hz |
| Input power $P_1$ | 14.35 kW |
| Output power $P_2$ | 15 kW |
| Nominal current | 23.3 A |
| Speed | 1500 1/min |
| Motor protection | integrated |
| Protection rating | IP55 |
| Insulation class | F (155°C) |
| Motor efficiency class | IE5 |

**Required operating pressure at 500m a.s.l.**

| | |
|---|---|
| at a water temp. of 75 °C | 0.7 bar |
| at a water temp. of 95 °C | 1.2 bar |
| at a water temp. of 110 °C | 1.7 bar |
| for every ±100 m of altitude | 0.1 bar |

**Connction diagram**

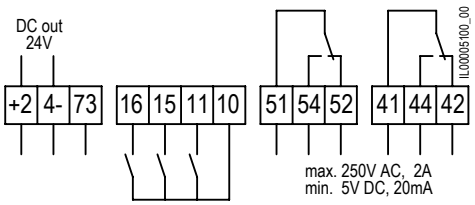


| | |
|---|---|
| **+24-** | 24 V DC out |
| **73** | Actual value input |
| **11,10** | External OFF or external ON (reversible) |
| **10,15** | Digital input minimum speed |
| **10,16** | Digital input maximum speed |
| **52, 54, 51** | Fault message or operating message |
| **42, 44, 41** | Operating or ready message |
| **L, N, PE** | Mains connection |

**Switch**

**1** Fault/operating message
**2** Operating/ready message
**3** External OFF or external ON

**Included in the scope of delivery**

– Sealing kit
– Screw kit

**Accessories**

– Biral Interface Modules
– Weld neck flange, pair PN10/16, DN125
– Sealing kits for flanges DN125, PN16

| | **Art. no.** |
|---|---|
| VivarA M 125-23 800 | 7000000663 |

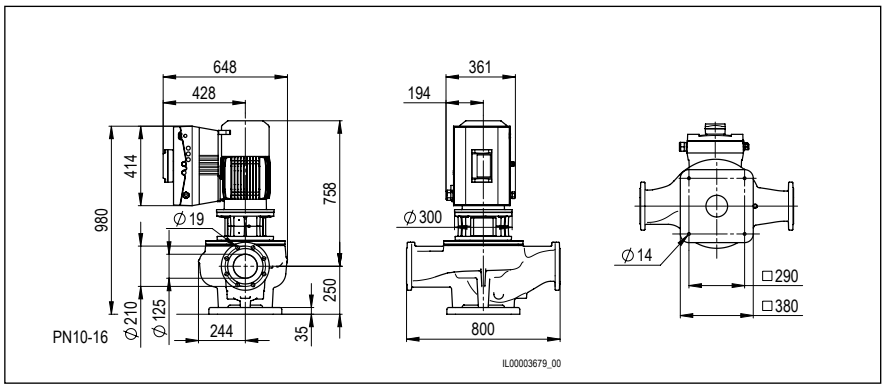


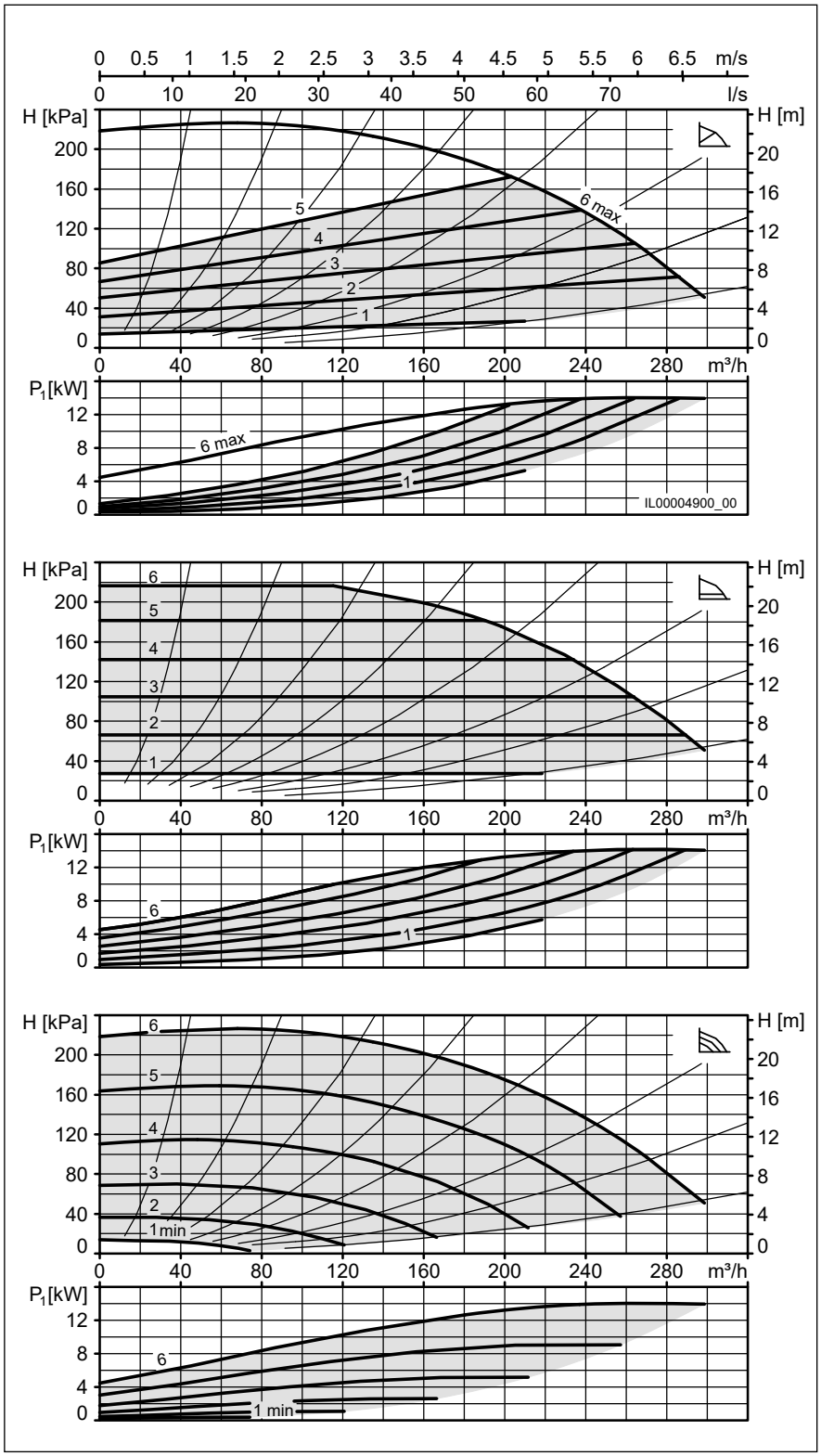

## VivarA M 125-30 800

| | |
|---|---|
| Minimum efficiency index (MEI) | ≥ 0.7 |
| Nominal width | DN 125 |
| Max. flow head H | 30 m |
| Overall length | 800 mm |
| Max. operating pressure | 16 bar |
| Media temperature | -20 °C…+140 °C |
| Ambient temperature | -20 °C…+40 °C |
| Net weight | 322 kg |

**Electrical data**

| | |
|---|---|
| Voltage | 3x400 V |
| Frequency | 50 Hz |
| Input power $P_1$ | 19.58 kW |
| Output power $P_2$ | 18.5 kW |
| Nominal current | 30.85 A |
| Speed | 1500 1/min |
| Motor protection | integrated |
| Protection rating | IP55 |
| Insulation class | F (155°C) |
| Motor efficiency class | IE5 |

**Required operating pressure at 500m a.s.l.**

| | |
|---|---|
| at a water temp. of 75 °C | 0.7 bar |
| at a water temp. of 95 °C | 1.2 bar |
| at a water temp. of 110 °C | 1.7 bar |
| for every ±100 m of altitude | 0.1 bar |

**Connction diagram**

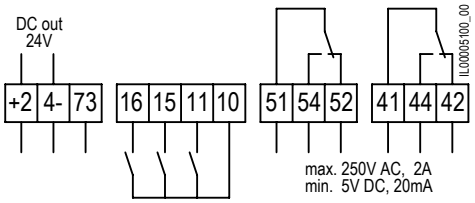


| | |
|---|---|
| **+24-** | 24 V DC out |
| **73** | Actual value input |
| **11,10** | External OFF or external ON (reversible) |
| **10,15** | Digital input minimum speed |
| **10,16** | Digital input maximum speed |
| **52, 54, 51** | Fault message or operating message |
| **42, 44, 41** | Operating or ready message |
| **L, N, PE** | Mains connection |

**Switch**

**1** Fault/operating message
**2** Operating/ready message
**3** External OFF or external ON

**Included in the scope of delivery**

– Sealing kit
– Screw kit

**Accessories**

– Biral Interface Modules
– Weld neck flange, pair PN10/16, DN125
– Sealing kits for flanges DN125, PN16

| | **Art. no.** |
|---|---|
| VivarA M 125-30 800 | 7000000664 |

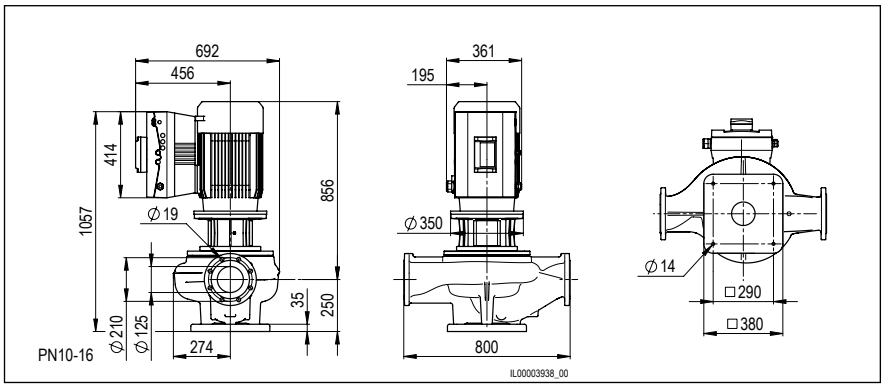


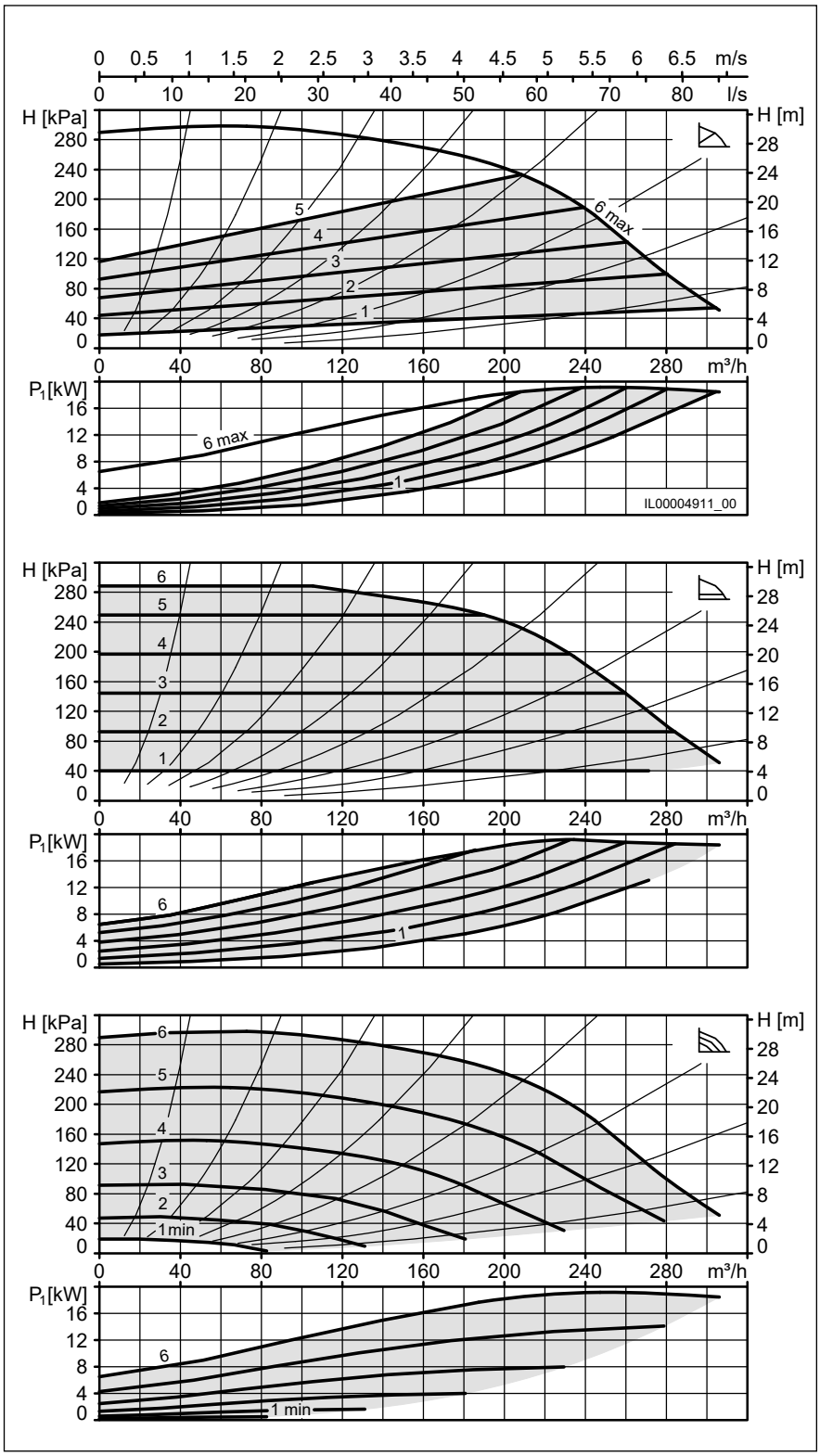

## VivarA M 150-13 800

| | |
|---|---|
| Minimum efficiency index (MEI) | ≥ 0.5 |
| Nominal width | DN 150 |
| Max. flow head H | 13 m |
| Overall length | 800 mm |
| Max. operating pressure | 16 bar |
| Media temperature | -20 °C…+140 °C |
| Ambient temperature | -20 °C…+40 °C |
| Net weight | 252 kg |

**Electrical data**

| | |
|---|---|
| Voltage | 3x400 V |
| Frequency | 50 Hz |
| Input power $P_1$ | 8.32 kW |
| Output power $P_2$ | 7.5 kW |
| Nominal current | 13.23 A |
| Speed | 1500 1/min |
| Motor protection | integrated |
| Protection rating | IP55 |
| Insulation class | F (155°C) |
| Motor efficiency class | IE5 |

**Required operating pressure at 500m a.s.l.**

| | |
|---|---|
| at a water temp. of 75 °C | 0.7 bar |
| at a water temp. of 95 °C | 1.2 bar |
| at a water temp. of 110 °C | 1.7 bar |
| for every ±100 m of altitude | 0.1 bar |

**Connction diagram**

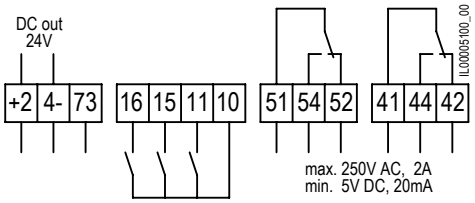


| | |
|---|---|
| **+24-** | 24 V DC out |
| **73** | Actual value input |
| **11,10** | External OFF or external ON (reversible) |
| **10,15** | Digital input minimum speed |
| **10,16** | Digital input maximum speed |
| **52, 54, 51** | Fault message or operating message |
| **42, 44, 41** | Operating or ready message |
| **L, N, PE** | Mains connection |

**Switch**

**1** Fault/operating message
**2** Operating/ready message
**3** External OFF or external ON

**Included in the scope of delivery**

– Sealing kit
– Screw kit

**Accessories**

– Biral Interface Modules
– Sealing kits for flanges DN150, PN16
– Base plate 235x235 KTL

| | **Art. no.** |
|---|---|
| VivarA M 150-13 800 | 7000000665 |

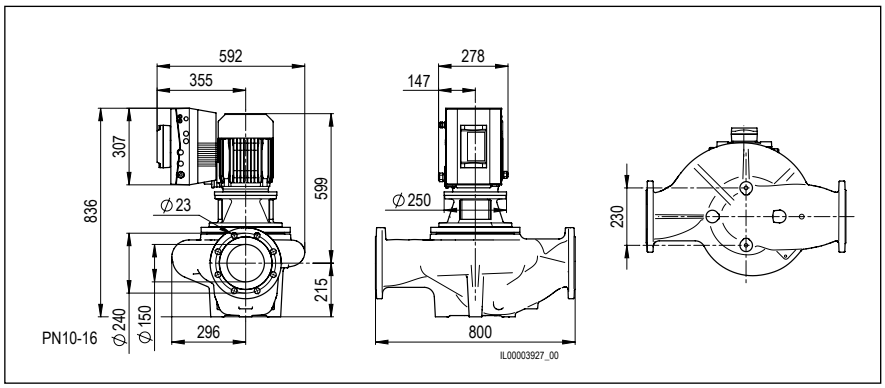


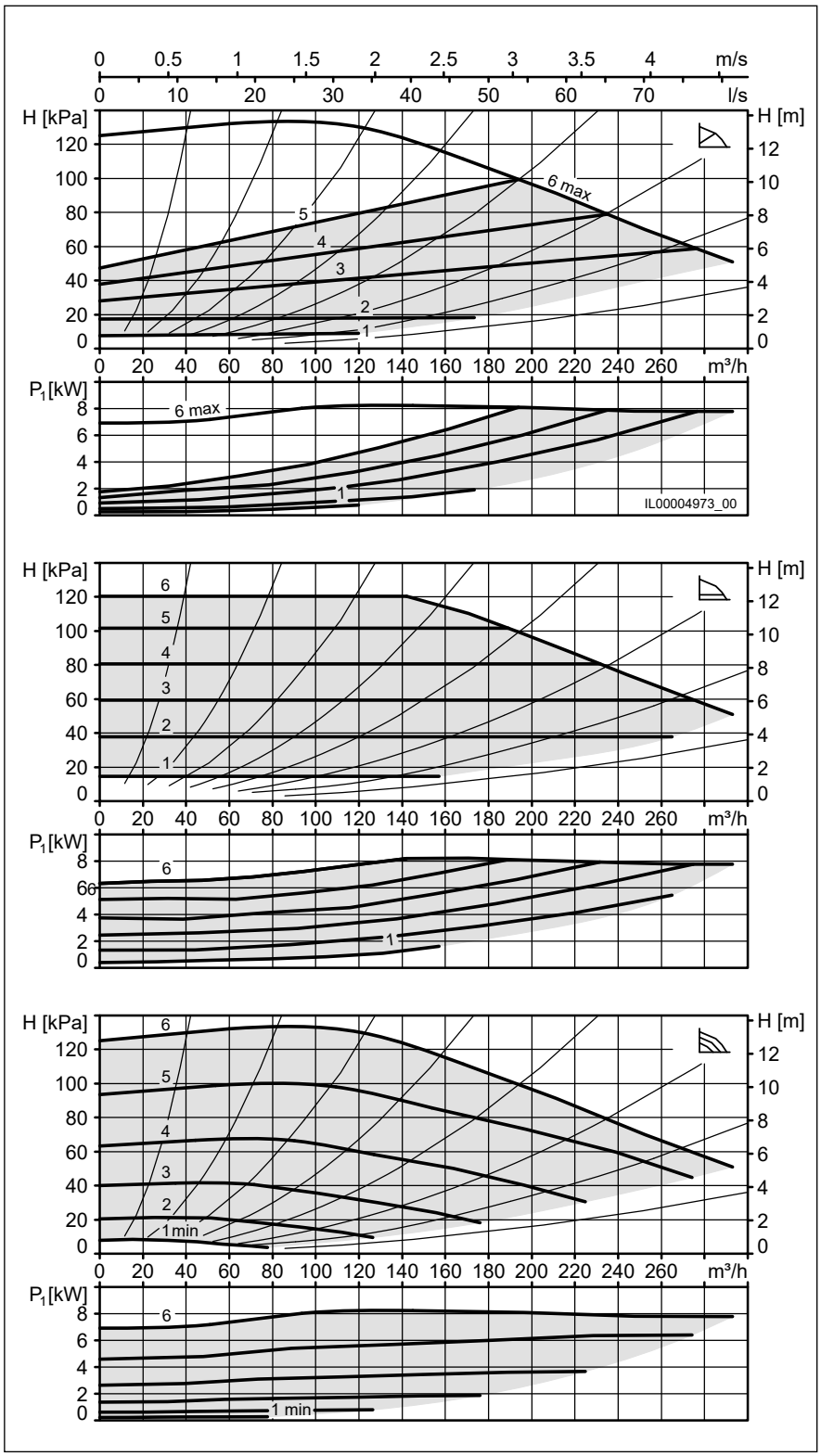

## VivarA M 150-16 800

| | |
|---|---|
| Minimum efficiency index (MEI) | ≥ 0.5 |
| Nominal width | DN 150 |
| Max. flow head H | 16 m |
| Overall length | 800 mm |
| Max. operating pressure | 16 bar |
| Media temperature | -20 °C…+140 °C |
| Ambient temperature | -20 °C…+40 °C |
| Net weight | 306 kg |

**Electrical data**

| | |
|---|---|
| Voltage | 3x400 V |
| Frequency | 50 Hz |
| Input power $P_1$ | 12.74 kW |
| Output power $P_2$ | 11 kW |
| Nominal current | 20.6 A |
| Speed | 1500 1/min |
| Motor protection | integrated |
| Protection rating | IP55 |
| Insulation class | F (155°C) |
| Motor efficiency class | IE5 |

**Required operating pressure at 500m a.s.l.**

| | |
|---|---|
| at a water temp. of 75 °C | 0.7 bar |
| at a water temp. of 95 °C | 1.2 bar |
| at a water temp. of 110 °C | 1.7 bar |
| for every ±100 m of altitude | 0.1 bar |

**Connction diagram**

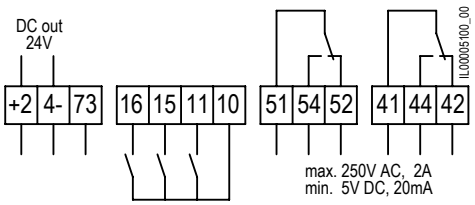


| | |
|---|---|
| **+24-** | 24 V DC out |
| **73** | Actual value input |
| **11,10** | External OFF or external ON (reversible) |
| **10,15** | Digital input minimum speed |
| **10,16** | Digital input maximum speed |
| **52, 54, 51** | Fault message or operating message |
| **42, 44, 41** | Operating or ready message |
| **L, N, PE** | Mains connection |

**Switch**

**1** Fault/operating message
**2** Operating/ready message
**3** External OFF or external ON

**Included in the scope of delivery**

– Sealing kit
– Screw kit

**Accessories**

– Biral Interface Modules
– Sealing kits for flanges DN150, PN16

| | **Art. no.** |
|---|---|
| VivarA M 150-16 800 | 7000000666 |

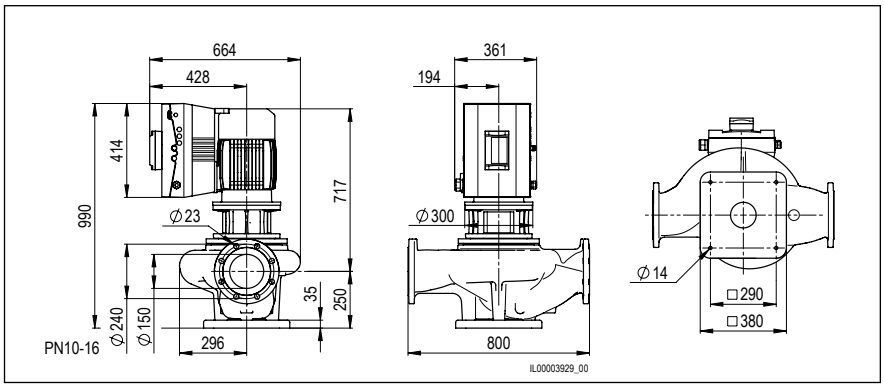


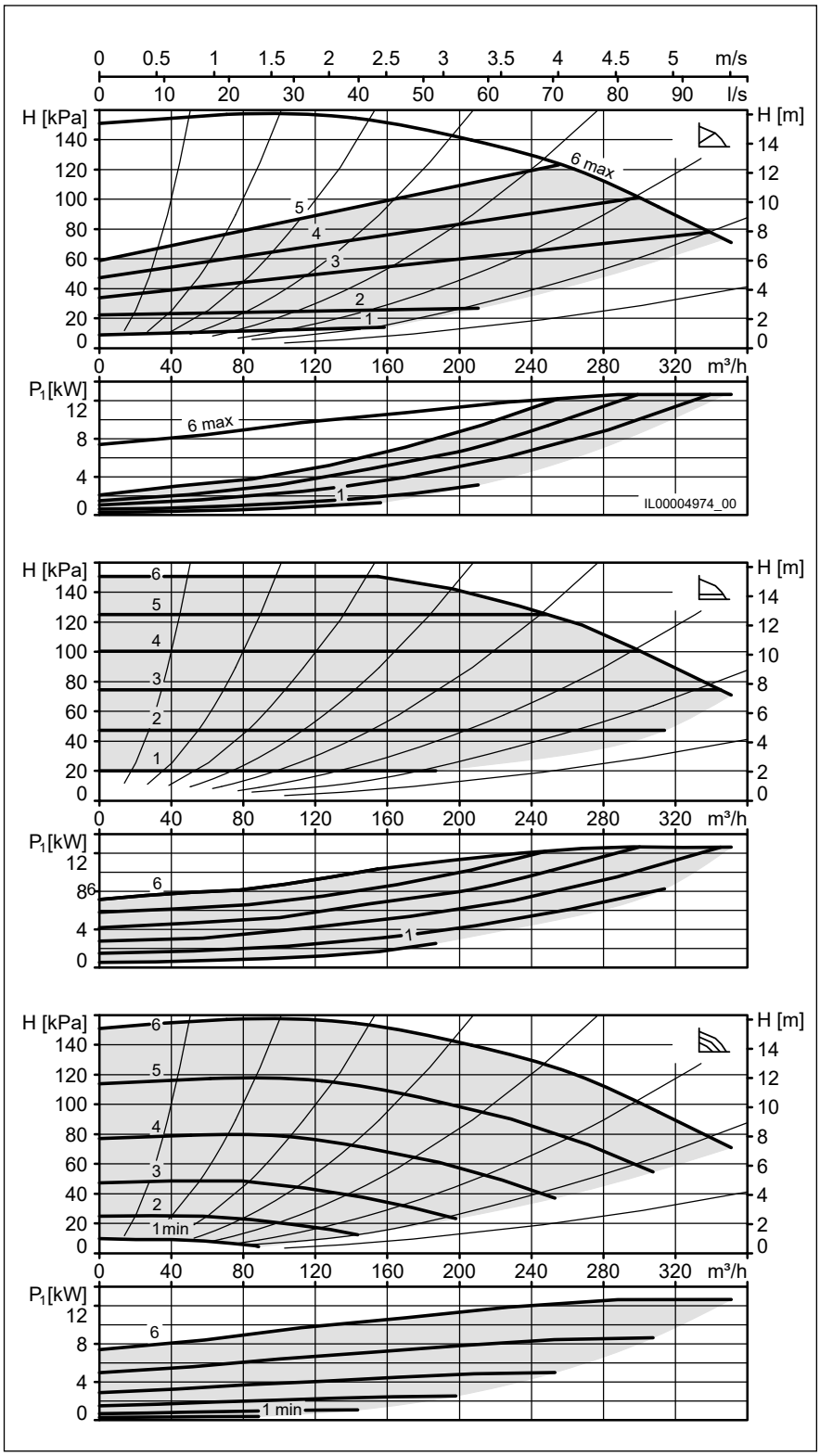

## VivarA M 150-20 800

| | |
|---|---|
| Minimum efficiency index (MEI) | ≥ 0.5 |
| Nominal width | DN 150 |
| Max. flow head H | 20 m |
| Overall length | 800 mm |
| Max. operating pressure | 16 bar |
| Media temperature | -20 °C…+140 °C |
| Ambient temperature | -20 °C…+40 °C |
| Net weight | 310 kg |

**Electrical data**

| | |
|---|---|
| Voltage | 3x400 V |
| Frequency | 50 Hz |
| Input power $P_1$ | 15.99 kW |
| Output power $P_2$ | 15 kW |
| Nominal current | 25.5 A |
| Speed | 1500 1/min |
| Motor protection | integrated |
| Protection rating | IP55 |
| Insulation class | F (155°C) |
| Motor efficiency class | IE5 |

**Required operating pressure at 500m a.s.l.**

| | |
|---|---|
| at a water temp. of 75 °C | 0.7 bar |
| at a water temp. of 95 °C | 1.2 bar |
| at a water temp. of 110 °C | 1.7 bar |
| for every ±100 m of altitude | 0.1 bar |

**Connction diagram**

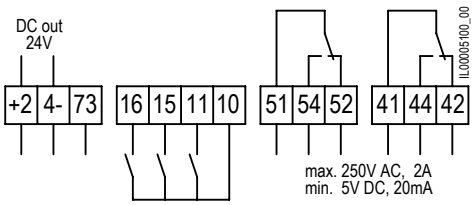


| | |
|---|---|
| **+24-** | 24 V DC out |
| **73** | Actual value input |
| **11,10** | External OFF or external ON (reversible) |
| **10,15** | Digital input minimum speed |
| **10,16** | Digital input maximum speed |
| **52, 54, 51** | Fault message or operating message |
| **42, 44, 41** | Operating or ready message |
| **L, N, PE** | Mains connection |

**Switch**

**1** Fault/operating message
**2** Operating/ready message
**3** External OFF or external ON

**Included in the scope of delivery**

– Sealing kit
– Screw kit

**Accessories**

– Biral Interface Modules
– Sealing kits for flanges DN150, PN16

| | **Art. no.** |
|---|---|
| VivarA M 150-20 800 | 7000000667 |

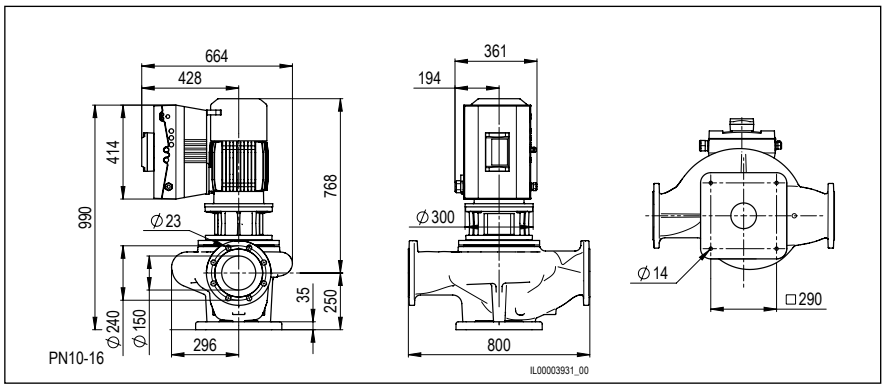


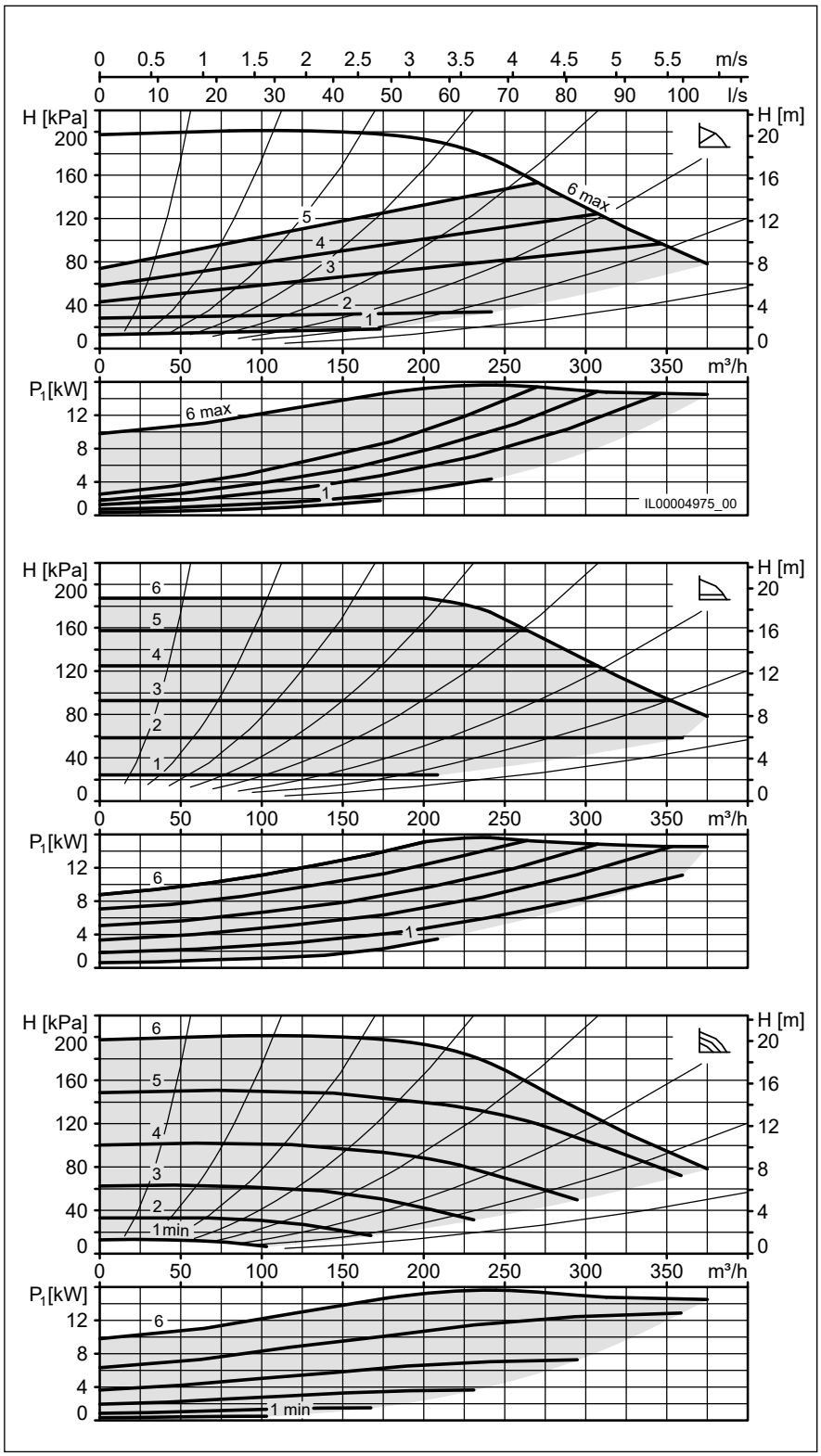

## VivarA M 150-22 800

| | |
|---|---|
| Minimum efficiency index (MEI) | ≥ 0.5 |
| Nominal width | DN 150 |
| Max. flow head H | 22 m |
| Overall length | 800 mm |
| Max. operating pressure | 16 bar |
| Media temperature | -20 °C…+140 °C |
| Ambient temperature | -20 °C…+40 °C |
| Net weight | 343 kg |

**Electrical data**

| | |
|---|---|
| Voltage | 3x400 V |
| Frequency | 50 Hz |
| Input power $P_1$ | 20.41 kW |
| Output power $P_2$ | 18.5 kW |
| Nominal current | 32.25 A |
| Speed | 1500 1/min |
| Motor protection | integrated |
| Protection rating | IP55 |
| Insulation class | F (155°C) |
| Motor efficiency class | IE5 |

**Required operating pressure at 500m a.s.l.**

| | |
|---|---|
| at a water temp. of 75 °C | 0.7 bar |
| at a water temp. of 95 °C | 1.2 bar |
| at a water temp. of 110 °C | 1.7 bar |
| for every ±100 m of altitude | 0.1 bar |

**Connction diagram**

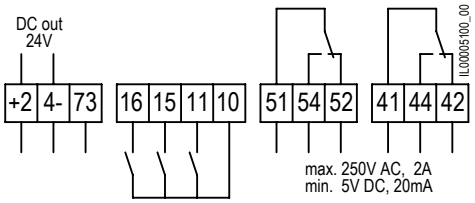


| | |
|---|---|
| **+24-** | 24 V DC out |
| **73** | Actual value input |
| **11,10** | External OFF or external ON (reversible) |
| **10,15** | Digital input minimum speed |
| **10,16** | Digital input maximum speed |
| **52, 54, 51** | Fault message or operating message |
| **42, 44, 41** | Operating or ready message |
| **L, N, PE** | Mains connection |

**Switch**

**1** Fault/operating message
**2** Operating/ready message
**3** External OFF or external ON

**Included in the scope of delivery**

– Sealing kit
– Screw kit

**Accessories**

– Biral Interface Modules
– Sealing kits for flanges DN150, PN16

| | **Art. no.** |
|---|---|
| VivarA M 150-22 800 | 7000000668 |

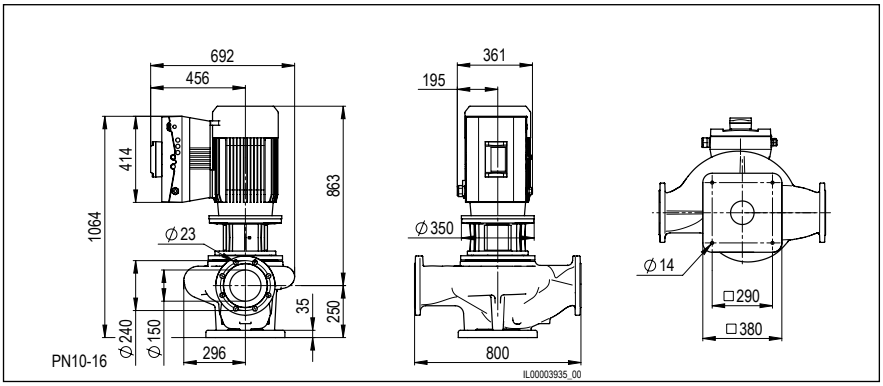


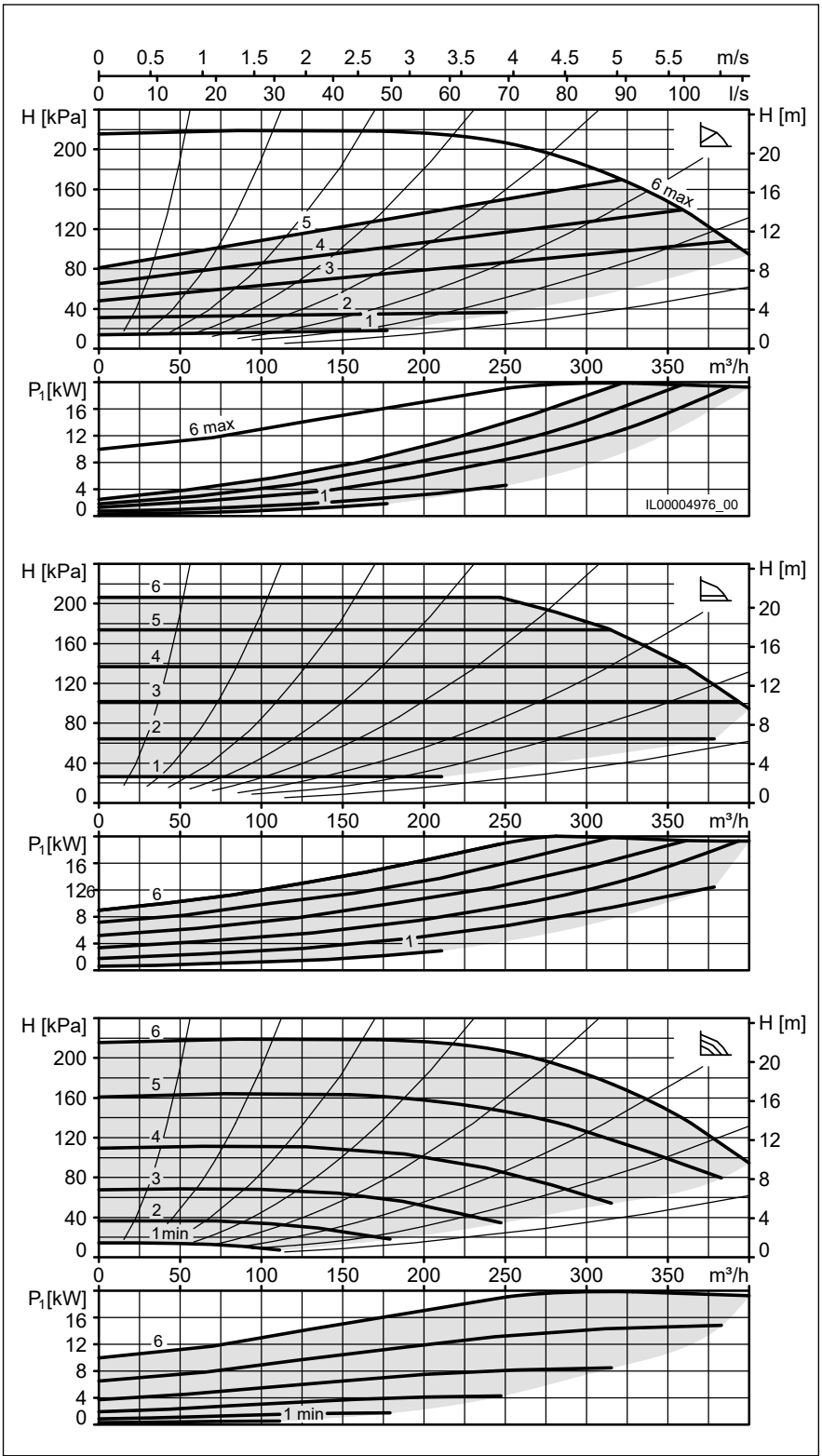

# 9 Biral Interface Module

## 9.1 Biral Interface Module BIM B3

With the Biral Interface Module, the VivarA can be easily integrated into any building services control system as the situation requires.

**Control module for:**
- Self-regulating pumps
- External speed specification
- External target value specification
- Operating or ready message (can be switched)
- Alternating or reserve mode (can be switched)

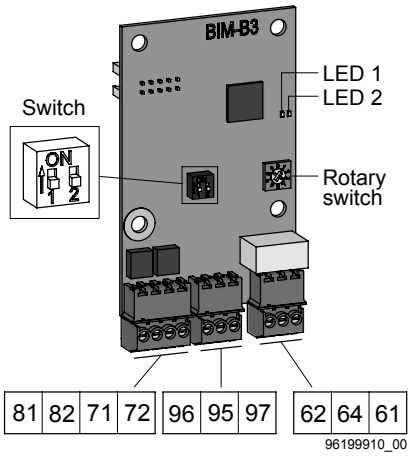


**Abb. 21:** BIM B3 connection diagram

| Terminals | |
|---|---|
| **81**<br>**82** | Digital input +<br>Digital input - |
| **71**<br>**72** | Analogue input +<br>Analogue input - |
| **96, 95, 97** | Biral Bus (double pump) |
| **62, 64, 61** | Operating signal or ready signal |

| Switch | |
|---|---|
| **1** | Operating signal or ready signal |
| **2** | 24h/24h alternating mode or 22h/2h reserve mode |

| LED | |
|---|---|
| **1** | Status |
| **2** | Heartbeat |

Item number: 1672420150

### 9.1.1 Functions of BIM B3 control module

**External speed specification**

| Rotary switch pos. | Profile | | Diagram | Signal | Speed/target value | |
|---|---|---|---|---|---|---|
| 1 | 0–10 V | CS | 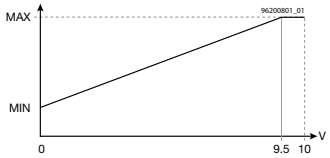 | 0–9.5 V<br>9.5–10 V | $n_{min}$ to $n_{max}$<br>MAX | 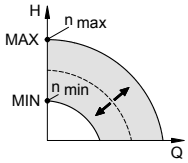 |
| 2 | 4–20 mA | CS | 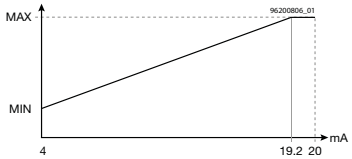 | 4–19.2 mA<br>19.2–20 mA | $n_{min}$ to $n_{max}$<br>MAX | 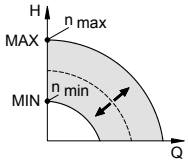 |
| 3 | PWM heating | CS | 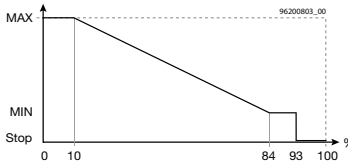 | 0–10%<br>10–84%<br>84–93%<br>93–100% | MAX<br>$n_{max}$ to $n_{min}$<br>MIN<br>Stop (OFF) | 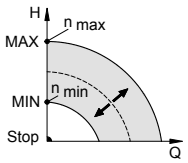 |

## External speed specification

| Rotary switch pos. | Profile | | Diagram | Signal | Speed/target value | |
|---|---|---|---|---|---|---|
| 4 | PWM solar | CS | 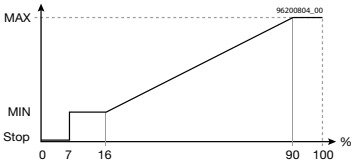  | 0–7%<br>7–16%<br>16–90%<br>90–100% | Stop (OFF)<br>MIN<br>$n_{min}$ to $n_{max}$<br>MAX | 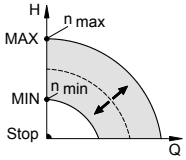  |
| 5 | 0–10 V to OFF | CS | 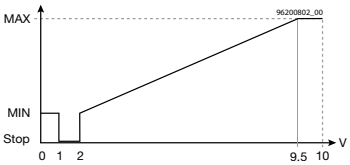  | 0–1 V<br>1–2 V<br>2–9.5 V<br>9.5–10 V | MIN<br>Stop (OFF)<br>$n_{min}$ to $n_{max}$<br>MAX | 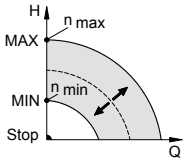  |
| 6 | OFF to 0–10 V | CS | 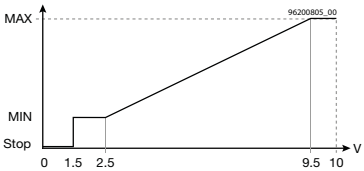  | 0–1.5 V<br>1.5–2.5 V<br>2.5–9.5 V<br>9.5–10 V | Stop (OFF)<br>MIN<br>$n_{min}n_{max}$<br>MAX | 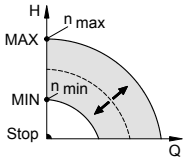  |

## External target value specification

| | | | | | | |
|---|---|---|---|---|---|---|
| 7 | OFF to 0-10 V | CP | 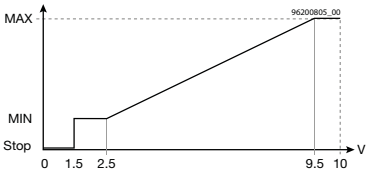  | 0–1.5 V<br>1.5–2.5 V<br>2.5–9.5 V<br>9.5–10 V | Stop (OFF)<br>MIN<br>Hmin–Hmax<br>MAX | 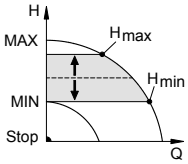  |
| 8 | OFF to 0-10 V | PP | 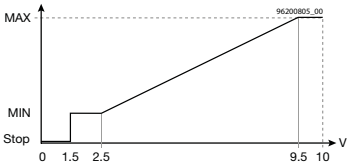  | 0–1.5 V<br>1.5–2.5 V<br>1.5–9.5 V<br>9.5–10 V | Stop (OFF)<br>MIN<br>Hmin–Hmax<br>MAX | 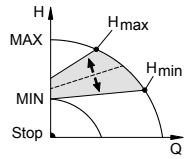  |

## Self-regulating

| Rotary switch pos. | Profile | | Description |
|---|---|---|---|
| 9 | LOCAL | CS<br>CP<br>PP | This position should be selected for self-regulating pumps.<br>For more information refer to the operating instructions of the Biral ModulA or VariA. |

## Slave

| | | | |
|---|---|---|---|
| 0 | SLAVE | CS<br>CP<br>PP | In alternating or reserve mode, this position should be selected for the reserve pump. |

Accessories

## 9.2 Biral Interface Module: BUS modules

With the Biral Interface Module, the VivarA can be easily integrated into any building services control system as the situation requires.

### BIM PROFIBUS DP (CIM 150)

Biral Interface Module for communication via a PROFIBUS network

**Item number**
1672260000

The BIM PROFIBUS DP has the appropriate terminals for connection to a PROFIBUS DP network. The terminating resistor is set using DIP switches. Two hexadecimal rotary switches are used to set the PROFIBUS DP address. The current communication status of the CIM 150 is indicated by two LEDs. One LED is used to indicate that the pump is correctly connected to the network and the other shows the communication status on the PROFIBUS network.

### BIM Modbus RTU (CIM 200)

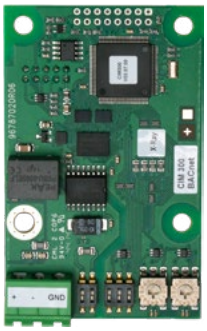

Biral Interface Module for communication via a Modbus RTU network

**Item number**
1672280000

The CIM 200 has the appropriate terminals for connection to a Modbus network. The parity and stop bits used to select the transmission speed and line termination are set using DIP switches. Two hexadecimal rotary switches are used to set the Modbus address. The current communication status of the CIM 200 is indicated by two LEDs. One LED is used to indicate that the pump is correctly connected to the network and the other shows the communication status on the Modbus network.

### BIM BACnet MS/TP (CIM 300)

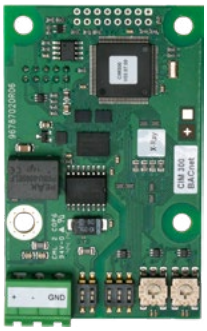

Biral Interface Module for communication via a BACnet MS/TP network

**Item number**
1672300000

The CIM 300 has the appropriate terminals for connection to a BACnet MS/TP network. The transmission speed and line termination as well as the customer-specific device object instance number are set using DIP switches. Two hexadecimal rotary switches are used to set the BACnet address. The current communication status of the CIM 300 is indicated by two LEDs. One LED is used to indicate that the pump is correctly connected to the network and the other shows the communication status on the BACnet network.

Further BUS modules upon request.

# 10 Mechanical accessories

## 10.1 Adaptor

To replace the VariA-E with a VivarA, an adaptor may possibly be necessary.

| Type | Nominal diameter | H | Item no. |
|---|---|---|---|
| DN40 adaptor – 90 mm | DN 40 | 90 mm | 7000001297 |
| DN40 adaptor – 190 mm | DN 40 | 190 mm | 7000001298 |
| DN50 adaptor – 170 mm | DN 50 | 170 mm | 7000001299 |
| DN65 adaptor – 135 mm | DN 65 | 135 mm | 7000001300 |
| DN80 adaptor – 40 mm | DN 80 | 40 mm | 7000001301 |
| DN80 adaptor – 140 mm | DN 80 | 140 mm | 7000001302 |
| DN80 adaptor – 60 mm | DN 80 | 60 mm | 7000001303 |

Consisting of adaptor, sealing kit and fixing screws.

## 10.2 Sealing kits

**PN 6, galvanised**
Consisting of seals (AFM), fixing screws and washers.

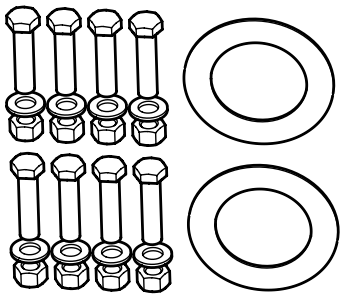

961899_00

| Type | Nominal diameter | Item no. |
|---|---|---|
| DN40 flange sealing kit, PN6 | DN 40 | 7000001430 |
| DN50 flange sealing kit, PN6 | DN 40 | 7000001431 |
| DN65 flange sealing kit, PN6 | DN 40 | 7000001432 |
| DN80 flange sealing kit, PN6 | DN 40 | 7000001433 |
| DN100 flange sealing kit, PN6 | DN 40 | 7000001438 |

**PN 16, galvanised**
Consisting of seals (AFM), fixing screws and washers

| Type | Nominal diameter | Item no. |
|---|---|---|
| DN40 flange sealing kit, PN16 | DN 40 | 7000001434 |
| DN50 flange sealing kit, PN16 | DN 50 | 7000001435 |
| DN65 flange sealing kit, PN16 | DN 65 | 7000001436 |
| DN80 flange sealing kit, PN16 | DN 80 | 7000001437 |
| DN100 flange sealing kit, PN16 | DN 100 | 7000001288 |
| DN125 flange sealing kit, PN16 | DN 125 | 7000001289 |
| DN150 flange sealing kit, PN16 | DN 150 | 7000001290 |

## 10.3 Base plate

The VivarA can be fitted with a base plate. This allows a better footing.

| Type | Item no. |
|---|---|
| Base plate 235 × 235 CDP | 7000001451 |

# 11 Additional information

## 11.1 Technical data

| | | | | | | | | | | | | | |
|---|---|---|---|---|---|---|---|---|---|---|---|---|---|
| **Media temperature** | –20 °C to +140 °C, see also Section 8.1 "List of media" | | | | | | | | | | | | |
| **Ambient temperature** | –20 °C to +40 °C, see also Section 7.1 "Ambient temperature" | | | | | | | | | | | | |
| **Max. operating pressure** | The maximum operating pressure is specified on the nameplate.<br>PN 6–10: 6 to 10 bar<br>PN 16: 16 bar | | | | | | | | | | | | |
| **Noise emission** | < 75 db(A) | | | | | | | | | | | | |
| **Relative humidity** | < 85%, condensation is not permitted | | | | | | | | | | | | |
| **Size of frequency inverter** | A | | | | | B | | | C | | D | | |
| **Nominal motor output (P2)** | 0.25 | 0.55 | 0.75 | 1.1 | 1.5 | 2.2 | 3.0 | 4.0 | 5.5 | 7.5 | 11.0 | 15.0 | 18.5 |
| **Power input when the pump is switched off** | < 3 W | | | | | | | | | | | | |
| **Mains voltage** | 3 × 400 V | | | | | | | | | | | | |
| **Mains frequency** | 47 to 63 Hz | | | | | | | | | | | | |
| **Maximum overload** | 150% of rated current for max. 60 sec. | | | | | | | | | | | | |
| **Protective function** | Overvoltage/undervoltage, I2t limitation, short circuit, motor inverter temperature, anti-tilt, blocking protection | | | | | | | | | | | | |
| **Protection class** | IP55 | | | | | | | | | | | | |
| **Winding class** | Insulation class F | | | | | | | | | | | | |
| **Leakage current** | During operation, the mains filter of the pump causes a leakage current to ground (earth) < 3.5 mA | | | | | | | | | | | | |
| **Electromagnetic compatibility** | Complies with DIN EN 61800-3, class C2 | | | | | | | | | | | | |
| **Vibration resistance and shock resistance** | According to FN 942 017, part 4; 5.3.3.3 combined test 2; 5–200 Hz for sinusoidal oscillations | | | | | | | | | | | | |
| **Cooling** | Surface cooling:<br>Sizes A to C: Free convection<br>Size D: With integrated fans | | | | | | | | | | | | |
| **THDi value** | 35% | | | | | | | | | | | | |

## 11.2 Delivery state

| | | | | |
|---|---|---|---|---|
| **Symbol** | 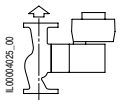 | 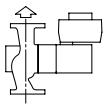 | 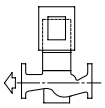 | 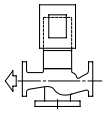 |
| **Name** | Vertical without base plate | Vertical without base plate (base plate available as an accessory) | Horizontal without base plate (base plate available as an accessory) | Horizontal with base plate |
| **Description** | 0.5 kW to 2.2 kW motor | 3.0 kW to 7.5 kW motor | Pump housing<br>from 600 mm<br>4.0 kW to 7.5 kW motor | Pump housing<br>from 600 mm<br>11 kW to 18.5 kW motor |

## 11.3 Dimensions and weights

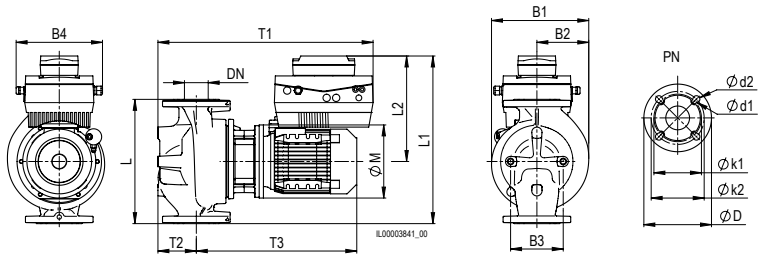


| VivarA | DN | k1/k2 × d1/d2 | PN | L | L1 | L2 | T1 | T2 | T3 | B1 | B2 | B3 | B4 | M | Net weight | Motor | FI | I [A] max | | |
|---|---|---|---|---|---|---|---|---|---|---|---|---|---|---|---|---|---|---|---|---|
| S 40-8 250 | 40 | 100/110 × 14/19 | 6–16 | 250 | 383 | 258 | 482 | 65 | 373 | 211 | 109 | – | 204 | 160 | 23 | 71 | A | 0.98 | × | – |
| S 40-12 250 | 40 | 100/110 × 14/19 | 6–16 | 250 | 383 | 258 | 482 | 65 | 373 | 211 | 109 | – | 204 | 160 | 23 | 71 | A | 1.42 | × | – |
| S 40-15 250 | 40 | 100/110 × 14/19 | 6–16 | 250 | 383 | 258 | 482 | 65 | 373 | 211 | 109 | – | 204 | 160 | 23 | 71 | A | 1.65 | × | – |
| S 40-18 250 | 40 | 100/110 × 14/19 | 6–16 | 250 | 383 | 258 | 482 | 65 | 373 | 211 | 109 | – | 204 | 160 | 24 | 71 | A | 2.16 | × | – |
| S 40-20 250 | 40 | 100/110 × 14/19 | 6–16 | 250 | 383 | 258 | 482 | 65 | 373 | 211 | 109 | – | 204 | 160 | 24 | 71 | A | 2.34 | × | – |
| S 40-24 250 | 40 | 100/110 × 14/19 | 6–16 | 250 | 383 | 258 | 482 | 65 | 373 | 211 | 109 | – | 204 | 160 | 24 | 71 | A | 2.99 | × | – |
| S 50-6 270 | 50 | 110/125 × 14/9 | 6–16 | 270 | 393 | 258 | 489 | 72 | 372 | 211 | 109 | – | 204 | 160 | 25 | 71 | A | 0.98 | × | – |
| S 50-8 270 | 50 | 110/125 × 14/9 | 6–16 | 270 | 393 | 258 | 489 | 72 | 372 | 211 | 109 | – | 204 | 160 | 25 | 71 | A | 1.19 | × | – |
| S 50-12 270 | 50 | 110/125 × 14/9 | 6–16 | 270 | 393 | 258 | 489 | 72 | 372 | 211 | 109 | – | 204 | 160 | 25 | 71 | A | 1.50 | × | – |
| S 50-15 270 | 50 | 110/125 × 14/9 | 6–16 | 270 | 393 | 258 | 489 | 72 | 372 | 211 | 109 | – | 204 | 160 | 25 | 71 | A | 1.84 | × | – |
| S 50-18 270 | 50 | 110/125 × 14/9 | 6–16 | 270 | 393 | 258 | 489 | 72 | 372 | 211 | 109 | – | 204 | 160 | 26 | 71 | A | 2.73 | × | – |
| S 50-20 270 | 50 | 110/125 × 14/9 | 6–16 | 270 | 405 | 271 | 532 | 72 | 372 | 236 | 118 | – | 236 | 160 | 27 | 71 | B | 3.57 | × | – |
| S 50-24 270 | 50 | 110/125 × 14/9 | 6–16 | 270 | 405 | 271 | 532 | 72 | 372 | 236 | 118 | – | 236 | 160 | 28 | 71 | B | 4.44 | × | – |
| S 65-6 340 | 65 | 130/145 × 14/19 | 6–16 | 340 | 428 | 258 | 499 | 74 | 380 | 211 | 109 | – | 204 | 160 | 27 | 71 | A | 1.04 | × | – |
| S 65-8 340 | 65 | 130/145 × 14/19 | 6–16 | 340 | 428 | 258 | 499 | 74 | 380 | 211 | 109 | – | 204 | 160 | 27 | 71 | A | 1.34 | × | – |
| S 65-12 340 | 65 | 130/145 × 14/19 | 6–16 | 340 | 428 | 258 | 499 | 74 | 380 | 211 | 109 | – | 204 | 160 | 27 | 71 | A | 1.74 | × | – |
| S 65-15 340 | 65 | 130/145 × 14/19 | 6–16 | 340 | 428 | 258 | 499 | 74 | 380 | 211 | 109 | – | 204 | 160 | 29 | 71 | A | 2.61 | × | – |
| S 65-18 340 | 65 | 130/145 × 14/19 | 6–16 | 340 | 440 | 270 | 542 | 74 | 280 | 236 | 118 | – | 236 | 160 | 29 | 71 | B | 3.51 | × | – |
| S 65-20 340 | 65 | 130/145 × 14/19 | 6–16 | 340 | 440 | 270 | 542 | 74 | 280 | 236 | 118 | – | 236 | 160 | 29 | 71 | B | 3.94 | × | – |
| S 80-12 360 PN6 | 80 | 150 × 19 | 6 | 360 | 438 | 258 | 526 | 94 | 287 | 232 | 109 | – | 204 | 160 | 34 | 71 | A | 2.58 | × | – |
| S 80-12 360 PN10/16 | 80 | 160 × 19 | 10–16 | 360 | 438 | 258 | 526 | 94 | 287 | 232 | 109 | – | 204 | 160 | 34 | 71 | A | 2.58 | × | – |
| S 80-15 360 PN6 | 80 | 150 × 19 | 6 | 360 | 450 | 270 | 569 | 94 | 387 | 241 | 118 | – | 236 | 160 | 36 | 71 | B | 3.58 | × | – |
| S 80-15 360 PN10/16 | 80 | 160 × 19 | 10–16 | 360 | 450 | 270 | 569 | 94 | 387 | 241 | 118 | – | 236 | 160 | 36 | 71 | B | 3.58 | × | – |
| S 80-18 360 PN6 | 80 | 150 × 19 | 6 | 360 | 450 | 270 | 569 | 94 | 387 | 241 | 118 | – | 236 | 160 | 36 | 71 | B | 4.26 | × | – |
| S 80-18 360 PN10/16 | 80 | 160 × 19 | 10–16 | 360 | 450 | 270 | 569 | 94 | 387 | 241 | 118 | – | 236 | 160 | 36 | 71 | B | 4.26 | × | – |
| S 100-12 450 PN6 | 100 | 170 × 19 | 6 | 450 | 483 | 258 | 546 | 102 | 399 | 235 | 110 | – | 204 | 160 | 38 | 71 | A | 2.51 | × | – |
| S 100-12 450 PN10/16 | 100 | 190 × 19 | 10–16 | 450 | 483 | 258 | 546 | 102 | 399 | 235 | 110 | – | 204 | 160 | 38 | 71 | A | 2.51 | × | – |
| S 100-15 450 PN6 | 100 | 170 × 19 | 6 | 450 | 495 | 270 | 589 | 102 | 399 | 243 | 118 | – | 236 | 160 | 40 | 71 | B | 3.55 | × | – |
| S 100-15 450 PN10/16 | 100 | 190 × 19 | 10–16 | 450 | 495 | 270 | 589 | 102 | 399 | 243 | 118 | – | 236 | 160 | 40 | 71 | B | 3.55 | × | – |
| S 100-18 450 PN6 | 100 | 170 × 19 | 6 | 450 | 495 | 270 | 589 | 102 | 399 | 243 | 118 | – | 236 | 160 | 40 | 71 | B | 4.33 | × | – |
| S 100-18 450 PN10/16 | 100 | 190 × 19 | 10–16 | 450 | 495 | 270 | 589 | 102 | 399 | 243 | 118 | – | 236 | 160 | 40 | 71 | B | 4.33 | × | – |
| M 40-30 340 | 40 | 105/110 × 18/18 | 6–16 | 340 | 460 | 290 | 577 | 94 | 439 | 248 | 130 | 144 | 236 | 200 | 48 | 90 | B | 5.16 | – | × |
| M 40-36 340 | 40 | 105/110 × 18/18 | 6–16 | 340 | 460 | 290 | 577 | 94 | 439 | 248 | 130 | 144 | 236 | 200 | 48 | 90 | B | 6.9 | – | × |
| M 40-43 340 | 40 | 105/110 × 18/18 | 6–16 | 340 | 502 | 332 | 608 | 94 | 439 | 248 | 130 | 144 | 28 | 200 | 54 | 90 | C | 9.92 | – | × |
| M 40-53 440 | 40 | 110 × 19 | 10–16 | 440 | 575 | 355 | 643 | 110 | 511 | 297 | 151 | 144 | 278 | 250 | 78 | 112 | C | 12.43 | – | × |
| M 50-29 340 | 50 | 125 × 18 | 10–16 | 340 | 459 | 289 | 578 | 115 | 419 | 234 | 117 | 144 | 236 | 200 | 49 | 90 | B | 5.3 | – | × |
| M 50-36 340 | 50 | 125 × 18 | 10–16 | 340 | 459 | 289 | 587 | 115 | 428 | 253 | 133 | 144 | 236 | 200 | 52 | 90 | B | 7.02 | – | × |
| M 50-43 340 | 50 | 125 × 18 | 10–16 | 340 | 502 | 332 | 618 | 115 | 428 | 278 | 138 | 144 | 278 | 200 | 58 | 90 | C | 9.9 | – | × |

| VivarA | DN | k1/k2 × d1/d2 | PN | L | L1 | L2 | T1 | T2 | T3 | B1 | B2 | B3 | B4 | M | Net weight | Motor | FI | I [A] max | | |
|---|---|---|---|---|---|---|---|---|---|---|---|---|---|---|---|---|---|---|---|---|
| M 65-21 340 | 65 | 130/145 × 14/19 | 6–16 | 340 | 459 | 289 | 589 | 105 | 439 | 266 | 142 | 144 | 236 | 200 | 51 | 90 | B | 5.16 | – | × |
| M 65-25 340 | 65 | 130/145 × 14/19 | 6–16 | 340 | 459 | 289 | 589 | 105 | 439 | 266 | 142 | 144 | 236 | 200 | 53 | 90 | B | 6.9 | – | × |
| M 65-34 340 | 65 | 130/145 × 14/19 | 10–16 | 340 | 502 | 332 | 620 | 105 | 439 | 282 | 142 | 144 | 278 | 200 | 60 | 90 | C | 10.04 | – | × |
| M 65-41 340 | 65 | 130/145 × 14/19 | 6–16 | 340 | 525 | 355 | 654 | 105 | 527 | 282 | 142 | 144 | 278 | 250 | 72 | 112 | C | 12.38 | – | × |
| M 80-18 360 | 80 | 160 × 19 | 10–16 | 360 | 469 | 289 | 592 | 105 | 442 | 253 | 134 | 144 | 236 | 200 | 56 | 90 | B | 5.28 | – | × |
| M 80-21 360 | 80 | 160 × 19 | 10–16 | 360 | 469 | 289 | 592 | 105 | 442 | 253 | 134 | 144 | 236 | 200 | 57 | 90 | B | 6.94 | – | × |
| M 80-24 360 | 80 | 160 × 19 | 10–16 | 360 | 512 | 332 | 623 | 105 | 442 | 274 | 134 | 144 | 278 | 200 | 63 | 90 | C | 9.82 | – | × |
| M 80-25 440 | 80 | 160 × 19 | 10–16 | 440 | 575 | 355 | 668 | 115 | 532 | 320 | 176 | 144 | 278 | 250 | 81 | 112 | C | 12.38 | – | × |
| M 100-16 450 | 100 | 180 × 19 | 10–16 | 450 | 514 | 289 | 629 | 140 | 445 | 283 | 156 | 144 | 236 | 200 | 69 | 90 | B | 6.78 | – | × |
| M 100-20 450 | 100 | 180 × 19 | 10–16 | 450 | 557 | 332 | 660 | 140 | 445 | 296 | 156 | 255 | 278 | 200 | 76 | 90 | C | 9.66 | – | × |
| M 100-24 450 | 100 | 180 × 19 | 10–16 | 450 | 580 | 355 | 695 | 140 | 533 | 303 | 156 | 144 | 278 | 250 | 86 | 112 | C | 12.36 | – | × |

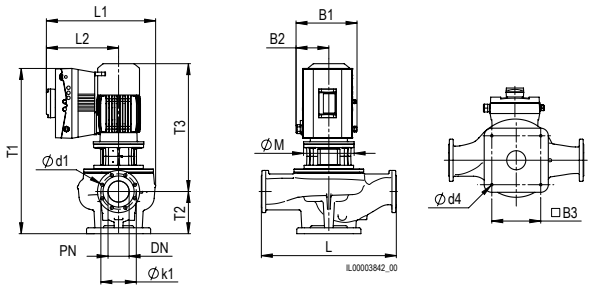


| VivarA | DN | k1 × d1 | PN | L | L1 | L2 | T1 | T2 | T3 | B1 | B2 | B3 | d4 | M | Net weight | Motor | FI | I [A] max | | |
|---|---|---|---|---|---|---|---|---|---|---|---|---|---|---|---|---|---|---|---|---|
| M 40-63 440 | 40 | 110 × 19 | 10–16 | 440 | 559 | 412 | 747 | 145 | 511 | 361 | 193 | 195 | 14 | 250 | 96 | 112 | D | 18.73 | – | × |
| M 80-33 440 | 80 | 160 × 19 | 10–16 | 440 | 556 | 412 | 773 | 150 | 532 | 361 | 193 | 195 | 14 | 250 | 101 | 112 | D | 19.15 | – | × |
| M 80-40 440 | 80 | 160 × 19 | 10–16 | 440 | 556 | 412 | 773 | 150 | 532 | 361 | 193 | 195 | 14 | 250 | 105 | 112 | D | 24.9 | – | × |
| M 100-25 550 | 100 | 180 × 19 | 10–16 | 550 | 563 | 412 | 795 | 175 | 529 | 361 | 193 | 290 | 14 | 250 | 127 | 112 | D | 17.79 | – | × |
| M 100-31 550 | 100 | 180 × 19 | 10–16 | 550 | 563 | 412 | 795 | 175 | 529 | 361 | 193 | 290 | 14 | 250 | 130 | 112 | D | 24.55 | – | × |
| M 100-36 550 | 100 | 180 × 19 | 10–16 | 550 | 579 | 428 | 864 | 175 | 665 | 361 | 194 | 290 | 14 | 300 | 160 | 132 | D | 29.5 | – | × |
| M 100-14 670 | 100 | 180 × 19 | 10–16 | 670 | 604 | 355 | 780 | 173 | 586 | 278 | 147 | – | – | 250 | 0 | 112 | C | 0 | × | – |
| M 100-20 670 | 100 | 180 × 19 | 10–16 | 670 | 604 | 355 | 780 | 173 | 586 | 278 | 147 | – | – | 250 | 0 | 112 | C | 0 | × | – |
| M 100-25 670 | 100 | 180 × 19 | 10–16 | 670 | 677 | 428 | 935 | 208 | 703 | 361 | 194 | 290 | 14 | 300 | 0 | 132 | D | 0 | – | × |
| M 125-11 620 | 125 | 210 × 19 | 10–16 | 620 | 514 | 312 | 796 | 215 | 590 | 236 | 125 | – | – | 250 | 172 | 112 | B | 7.42 | × | – |
| M 125-13 620 | 125 | 210 × 19 | 10–16 | 620 | 557 | 355 | 827 | 215 | 590 | 278 | 147 | – | – | 250 | 178 | 112 | C | 10.12 | × | – |
| M 125-16 620 | 125 | 210 × 19 | 10–16 | 620 | 557 | 355 | 827 | 215 | 590 | 278 | 147 | – | – | 250 | 183 | 112 | C | 13.2 | × | – |
| M 125-19 620 | 125 | 210 × 19 | 10–16 | 620 | 630 | 428 | 981 | 250 | 707 | 361 | 194 | 290 | 14 | 300 | 230 | 132 | D | 21.45 | – | × |
| M 125-23 800 | 125 | 210 × 19 | 10–16 | 800 | 648 | 428 | 980 | 250 | 758 | 361 | 194 | 290 | 14 | 300 | 276 | 132XXL | D | 23.3 | – | × |
| M 125-30 800 | 125 | 210 × 19 | 10–16 | 800 | 692 | 456 | 1057 | 250 | 856 | 361 | 195 | 290 | 14 | 350 | 322 | 160 | D | 30.85 | – | × |
| M 150-13 800 | 150 | 240 × 23 | 10–16 | 800 | 592 | 355 | 836 | 215 | 599 | 278 | 147 | – | – | 250 | 252 | 112 | C | 13.23 | × | – |
| M 150-16 800 | 150 | 240 × 23 | 10–16 | 800 | 664 | 428 | 990 | 250 | 717 | 361 | 194 | 290 | 14 | 300 | 306 | 132 | D | 20.6 | – | × |
| M 150-20 800 | 150 | 240 × 23 | 10–16 | 800 | 664 | 428 | 990 | 250 | 768 | 361 | 194 | 290 | 14 | 300 | 310 | 132XXL | D | 25.5 | – | × |
| M 150-22 800 | 150 | 240 × 23 | 10–16 | 800 | 692 | 456 | 1064 | 250 | 863 | 361 | 195 | 290 | 14 | 350 | 343 | 160 | D | 32.25 | – | × |

## 11.4 NPSH

### VivarA S 40-...

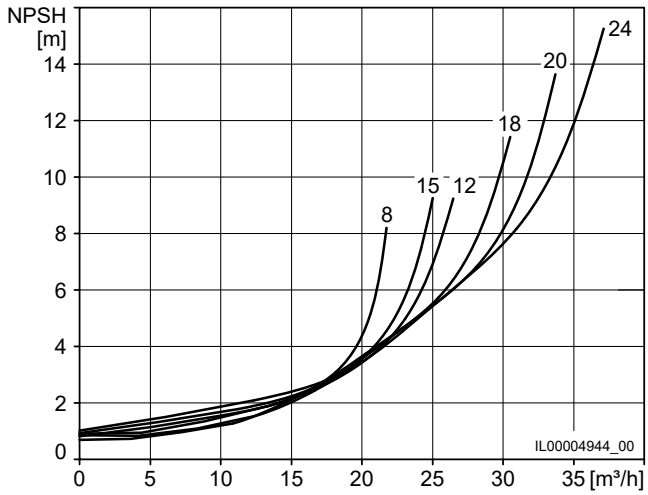


### VivarA S 80-...

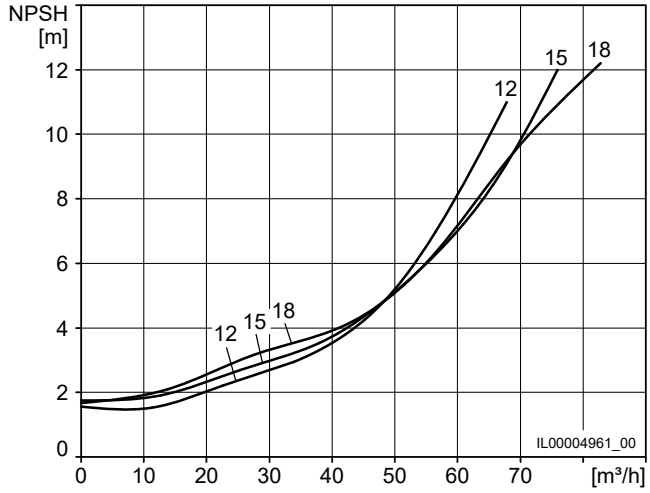


### VivarA S 50-...

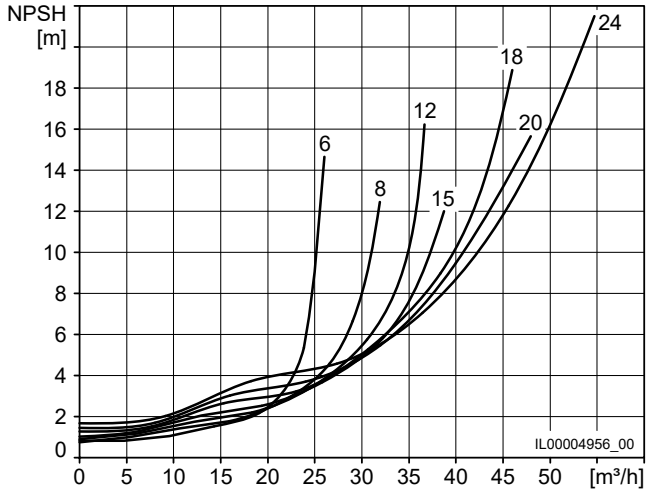


### VivarA S 100-...

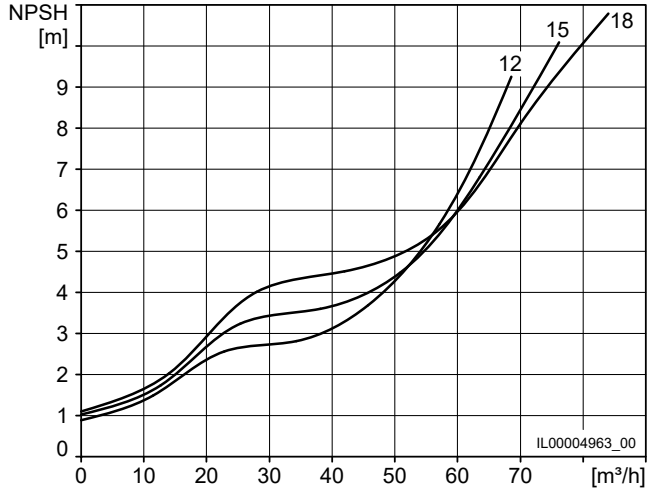


### VivarA S 65-...

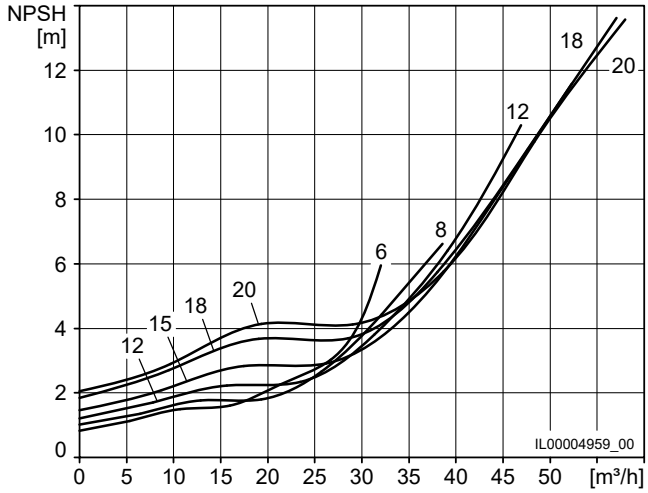


### VivarA M 40-...

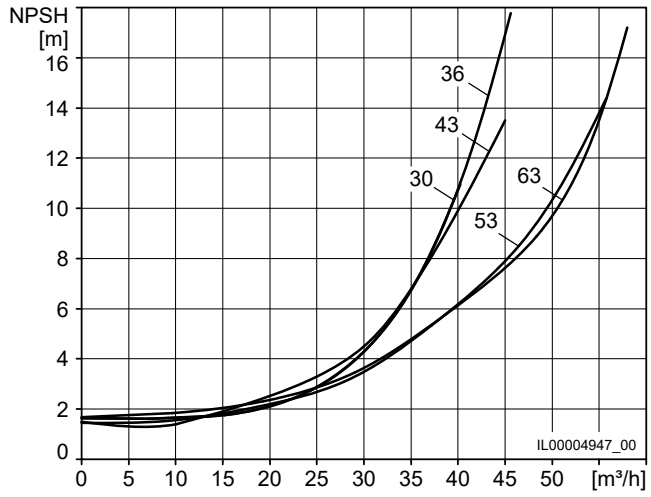


Accessories

## VivarA M 50-...

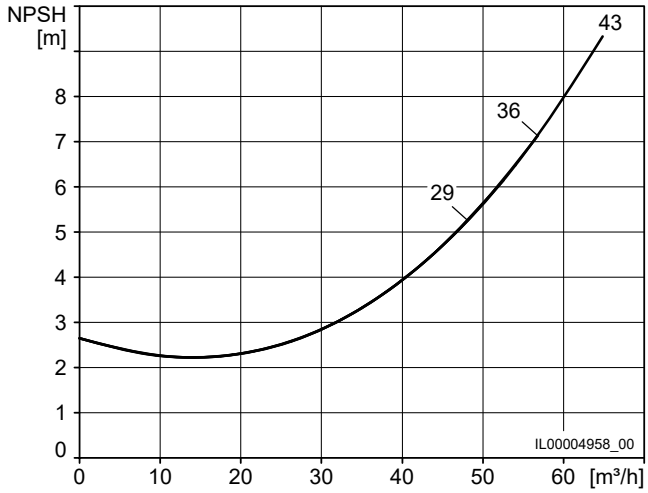


## VivarA M 100-...

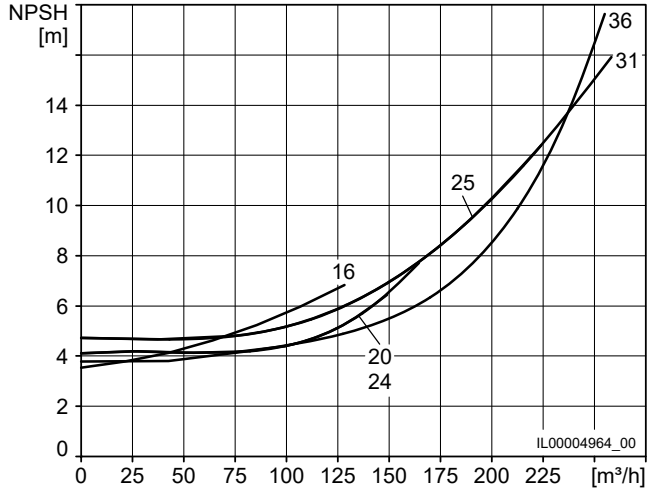


## VivarA M 65-...

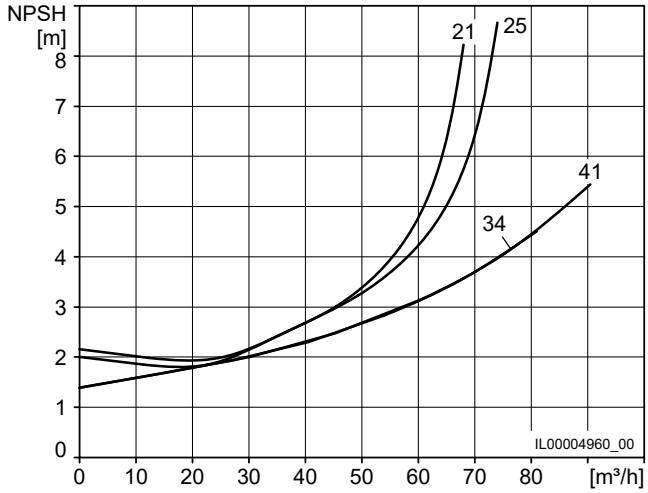


## VivarA M 125-...

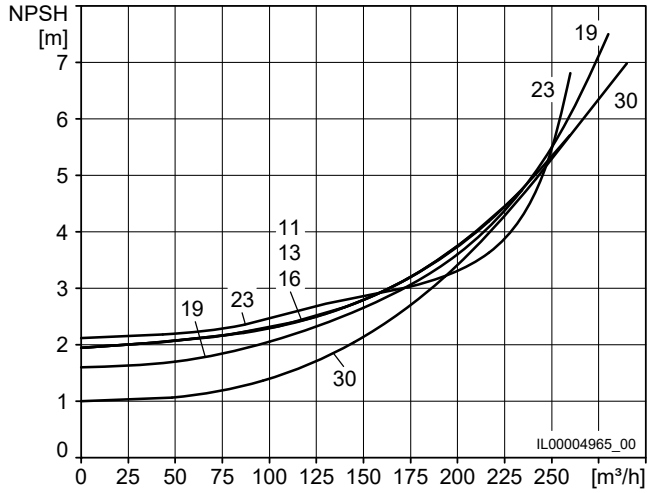


## VivarA M 80-...

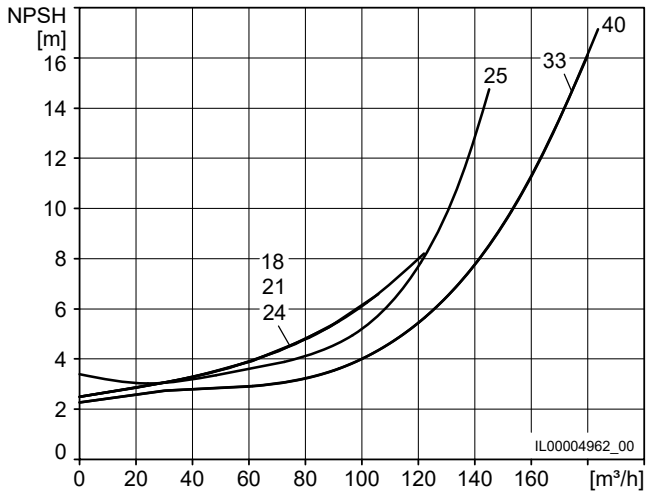


## VivarA M 150-...

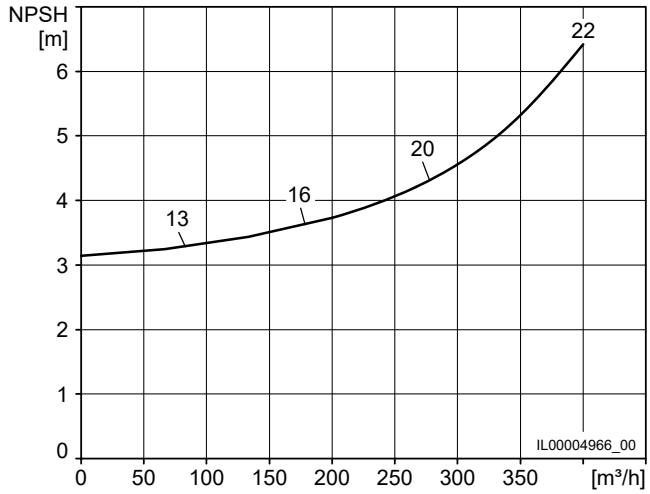


Accessories

# Order form

Scan and send this form to **info@biral.ch** to receive a quote.

### Design details*

Pumped medium

Media temperature

Pumped quantity

Discharge head

Amount of glycol

BIM module

Accessories

### Your details

Company

Customer no.

Contact

Street

Town/postcode

Country

Phone

E-mail

### Notes

| Item no. | Name | Quantity |
|---|---|---|
| | | |
| | | |
| | | |
| | | |
| | | |
| | | |
| | | |

* A pump cannot be quoted without these specifications.

2021-01_7800000183_00_EX_en

**Biral AG**
Südstrasse 10
CH-3110 Münsingen
T +41 31 720 90 00
info@biral.ch
www.biral.eu

Moving people and elements